Радарные датчики и угловые отражатели

Технические характеристики

По вопросам продаж и поддержки обращайтесь:

Алматы (727)345-47-04
Ангарск (3955)60-70-56
Архангельск (8182)63-90-72
Астрахань (8512)99-46-04
Барнаул (3852)73-04-60
Белгород (4722)40-23-64
Благовещенск (4162)22-76-07
Брянск (4832)59-03-52
Владивосток (423)249-28-31
Владикавказ (8672)28-90-48
Владимир (4922)49-43-18
Волгоград (844)278-03-48
Вологда (8172)26-41-59
Воронеж (473)204-51-73
Екатеринбург (343)384-55-89
Иваново (4932)77-34-06
Ижевск (3412)26-03-58
Иркутск (395)279-98-46
Казань (843)206-01-48
Калининград (4012)72-03-81
Калуга (4842)92-23-67
Кемерово (3842)65-04-62
Киров (8332)68-02-04
Коломна (4966)23-41-49
Кострома (4942)77-07-48
Краснодар (861)203-40-90
Красноярск (391)204-63-61
Курск (4712)77-13-04
Курган (3522)50-90-47
Липецк (4742)52-20-81
Магнитогорск (3519)55-03-13
Москва (495)268-04-70
Мурманск (8152)59-64-93
Набережные Челны (8552)20-53-41
Нижний Новгород (831)429-08-12
Новокузнецк (3843)20-46-81
Ноябрьск (3496)41-32-12
Новосибирск (383)227-86-73
Омск (3812)21-46-40
Орел (4862)44-53-42
Оренбург (3532)37-68-04
Пенза (8412)22-31-16
Петрозаводск (8142)55-98-37
Псков (8112)59-10-37
Пермь (342)205-81-47
Ростов-на-Дону (863)308-18-15
Рязань (4912)46-61-64
Самара (846)206-03-16
Санкт-Петербург (812)309-46-40
Саратов (845)249-38-78
Севастополь (8692)22-31-93
Саранск (8342)22-96-24
Симферополь (3652)67-13-56
Смоленск (4812)29-41-54
Сочи (862)225-72-31
Ставрополь (8652)20-65-13
Сургут (3462)77-98-35
Сыктывкар (8212)25-95-17
Тамбов (4752)50-40-97
Тверь (4822)63-31-35
Тольятти (8482)63-91-07
Томск (3822)98-41-53
Тула (4872)33-79-87
Тюмень (3452)66-21-18
Ульяновск (8422)24-23-59
Улан-Удэ (3012)59-97-51
Уфа (347)229-48-12
Хабаровск (4212)92-98-04
Чебоксары (8352)28-53-07
Челябинск (351)202-03-61
Череповец (8202)49-02-64
Чита (3022)38-34-83
Якутск (4112)23-90-97
Ярославль (4852)69-52-93

Россия +7(495)268-04-70
Казахстан +7(727) 345-47-04
Беларусь +(375) 257-127-884
Узбекистан +998(71)205-18-59
Киргизия +996(312)96-26-47

эл.почта: phb@nt-rt.ru || сайт: https://pepperl-fuchs.nt-rt.ru/

Radar sensor

MWC25M-L2M-B16-2M

- CANopen interface
- Sensing range up to 25 m
- Degree of protection IP68 / IP69
- High EMC resistance
- Sensor head bidirectional and rotatable
- Robust metall fastening

Radar sensor for distance and velocity measuring up to 25 m sensing range, with 2m cable

Function

The radar sensor series MWC25M with CANopen interface for medium distances up to 25 m range is optimized for use in industrial applications. Its compact cubic housing of the L2 series is proven in many industrial areas due to its high robustness.
Via Service Data Objects (SDOs), you can directly parameterize the radar sensor optimally for your application. Alternatively, parameterization with extended functionality is also possible using the FDT framework program PACTware and a DTM. This allows you to additionally use various evaluation and filter settings for distance and velocity values
The radar sensor operates according to the frequency modulated continuous wave (FMCW) method in the ISM band at 122 ... 123 GHz, approved for industrial use. In doing so, it emits a continuous radar signal that is varied over the frequency range of the ISM band. With this method, the sensor is able to reliably detect the distance and velocity of static and moving objects. When measuring velocity, the radar sensor detects the velocity of an object in the radial direction only, without measuring tangential velocities or velocity parts.

Dimensions

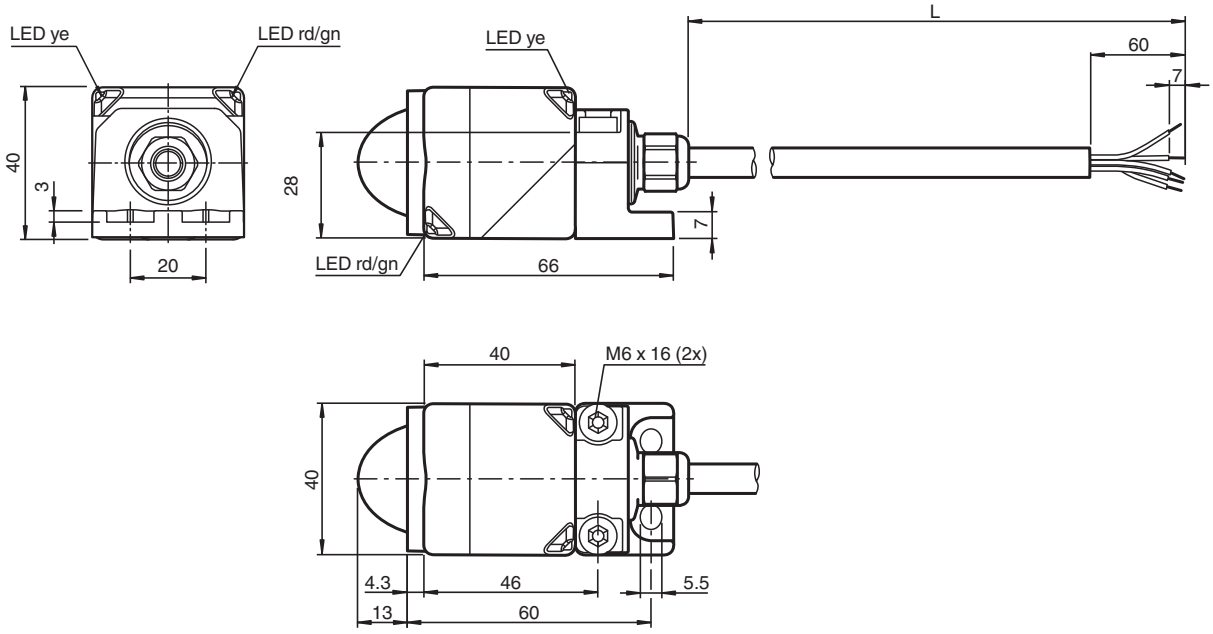

Technical Data

General specifications	
Measuring technology	FMCW

Release date: 2024-07-23 Date of issue: 2024-07-23 Filename: 70134318-100003_eng.pdf

Technical Data

Measured variable		distance velocity
Measurement range		
Distance		0.5 ... 25 m
Velocity		0.1 ... 80 m/s
Dead band		0 ... 0.5 m
Standard target plate		corner reflector 100 mm edge length
Working frequency		122.25 ... 123 GHz
Opening angle		< 12 ° (see characteristic curve)
Transmitter radiated power (EIRP)		< +20 dBm
Sampling rate		1 ... 200 Hz , programmable
Nominal ratings		
Linearity error		< ± 0.1 % of full-scale value (linearity error incl. temperature drift)
Repeat accuracy	R	1 mm
Resolution		distance 1 mm velocity 0.01 m/s
Time delay before availability	t_v	≤ 400 ms
Functional safety related parameters		
Performance level (PL)		up to PL c
$MTTF_d$		310 a
Mission Time (T_M)		20 a
Diagnostic Coverage (DC)		up to 60 % , see functional safety manual
Indicators/operating means		
LED yellow		object within measuring range
LED red/green		CANopen status display
Electrical specifications		
Operating voltage	U_B	9 ... 32 V
No-load supply current	I_0	≤ 100 mA
Power consumption	P_0	typ. 0.4 W , max. 1 W
Interface		
Interface type		CANopen
Process data		distance velocity signal quality cycle counter
Node ID		1 ... 127 , programmable
Transfer rate		125 kBit/s , 250 kBit/s , 500 kBit/s , 800 kBit/s , 1 MBit/s , programmable
Termination		external
Compliance with standards and directives		
Standard conformity		
Standards		EN 301489-1 EN 301489-3 EN 305550-1 EN 62368-1 EN 62311
Approvals and certificates		
UL approval		cULus
FCC approval		CFR Title 47, Part 15 FCC ID: IRE-MWL2A
ISED approval		IC ID: 7037A-MWL2A HVIN/PMN: MWL2A
Ambient conditions		
Ambient temperature		-40 ... 70 °C (-40 ... 158 °F)
Storage temperature		-40 ... 85 °C (-40 ... 185 °F)
Mechanical specifications		
Connection type		cable
Degree of protection		IP68 / IP69

Release date: 2024-07-23 Date of issue: 2024-07-23 Filename: 70134318-100003_eng.pdf

Technical Data

Material		
Housing		PA-GF35 powder coated metal mounting flange
Radome		PTFE
Cable		
Cable diameter		7.25 mm ± 0.2 mm
Bending radius		static min. 37.3 mm , dynamic min. 74.7 mm
Material		PUR
Color		black
Number of cores		5
Core cross section		0.8 mm^2
Length	L	2000 mm ± 25 mm
Mass		335 g
Dimensions		
Height		40 mm
Width		40 mm
Length		83.3 mm
Factory settings		
Default setting		measured value "distance", measured value "velocity", signal quality, counter-2 (object 0x4000)
Sampling rate		50 Hz (object 0x4000)
Node ID		16
Transfer rate		250 kBit/s

Connection Assignment

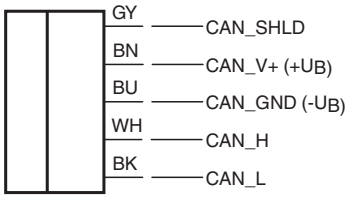

Characteristic Curve

Characteristic response curve radar sensor

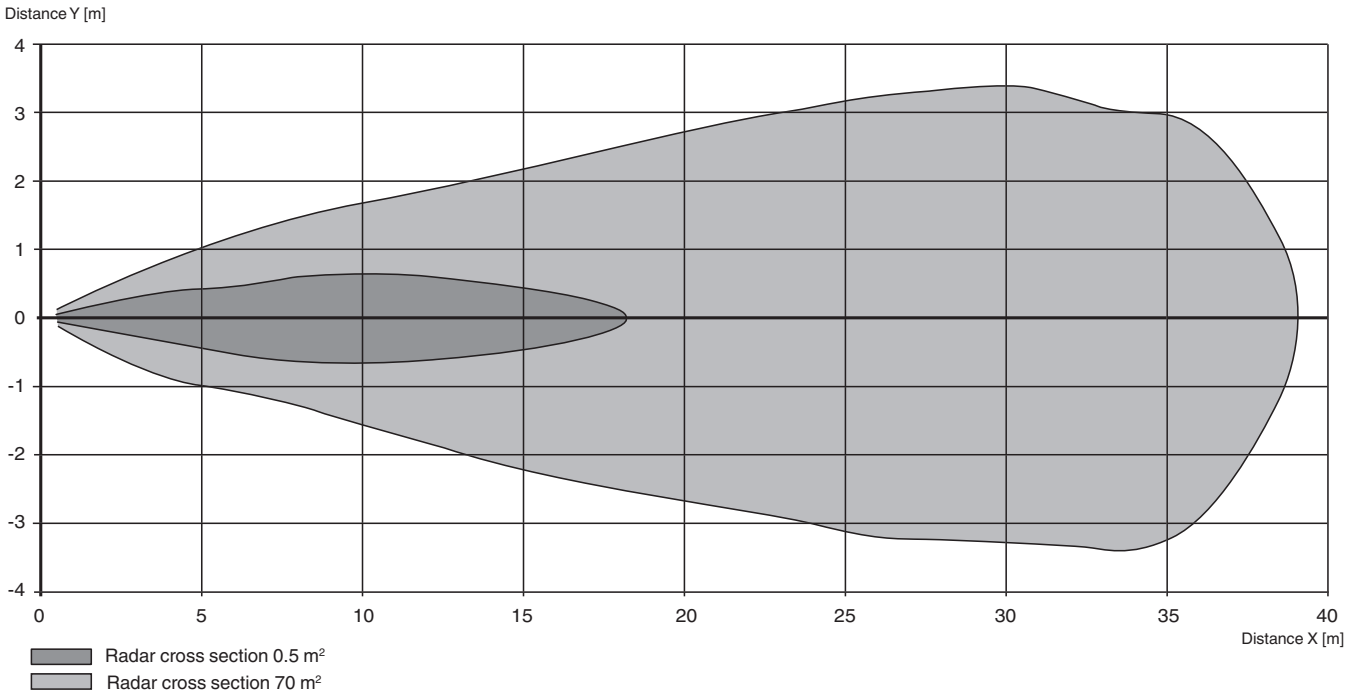

Technical Features

Emitted Interference and Interference Immunity Specifications

Mains-Borne Interference in Accordance with ISO 7637-2									
Pulse	1	2a	2b	3a	3b	4	5	5a	5b
Failure criterion	A	A	C	A	A	A	A	A	A

Interference Immunity	Coupling	Level	Failure Criterion
ISO 11452-2	–	30 V/m	–
EN 61000-4-2	Contact	8 kV	A
	Air	15 kV	A
EN 61000-4-3	–	11 V/m	A
EN 61000-4-4	Direct	1,1 kV	B
	Capacitiv	2,2 kV	B
EN 61000-4-6	–	15 V	A
EN 55011	Contact	Class B	–
EN 55011	Radiation	Class B	–

Release date: 2024-07-23 Date of issue: 2024-07-23 Filename: 70134318-100003_eng.pdf

Radar sensor

MWC25M-L2M-B16-V15

- CANopen interface
- Sensing range up to 25 m
- Degree of protection IP68 / IP69
- High EMC resistance
- Sensor head bidirectional and rotatable
- Robust metall fastening

Radar sensor for distance and velocity measuring up to 25 m sensing range, with M12 connector

Function

The radar sensor series MWC25M with CANopen interface for medium distances up to 25 m range is optimized for use in industrial applications. Its compact cubic housing of the L2 series is proven in many industrial areas due to its high robustness.
Via Service Data Objects (SDOs), you can directly parameterize the radar sensor optimally for your application. Alternatively, parameterization with extended functionality is also possible using the FDT framework program PACTware and a DTM. This allows you to additionally use various evaluation and filter settings for distance and velocity values
The radar sensor operates according to the frequency modulated continuous wave (FMCW) method in the ISM band at 122 ... 123 GHz, approved for industrial use. In doing so, it emits a continuous radar signal that is varied over the frequency range of the ISM band. With this method, the sensor is able to reliably detect the distance and velocity of static and moving objects. When measuring velocity, the radar sensor detects the velocity of an object in the radial direction only, without measuring tangential velocities or velocity parts.

Dimensions

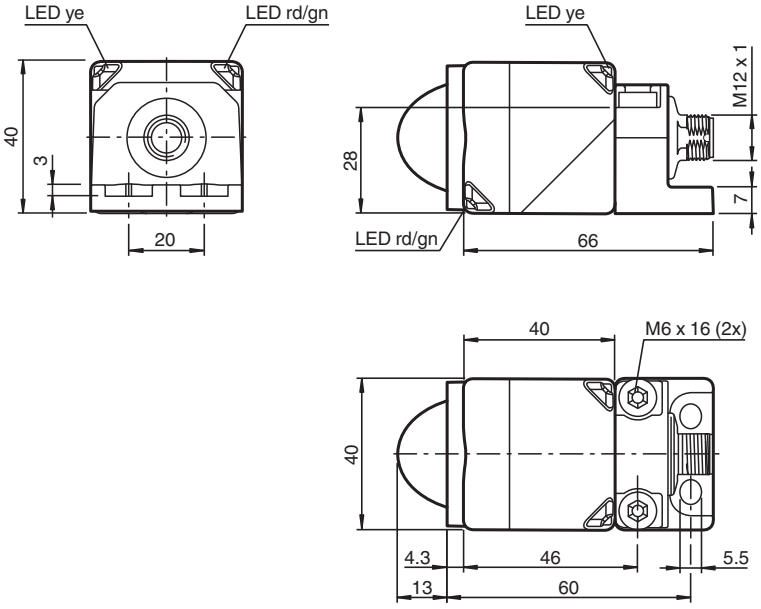

Technical Data

General specifications	
Measuring technology	FMCW

Release date: 2024-09-12 Date of issue: 2024-09-12 Filename: 70134318-100000_eng.pdf

Technical Data

Measured variable		distance velocity
Measurement range		
Distance		0.5 ... 25 m
Velocity		0.1 ... 80 m/s
Dead band		0 ... 0.5 m
Standard target plate		corner reflector 100 mm edge length
Working frequency		122.25 ... 123 GHz
Opening angle		< 12 ° (see characteristic curve)
Transmitter radiated power (EIRP)		< +20 dBm
Sampling rate		1 ... 200 Hz , programmable
Nominal ratings		
Linearity error		< ± 0.1 % of full-scale value (linearity error incl. temperature drift)
Repeat accuracy	R	1 mm
Resolution		distance 1 mm velocity 0.01 m/s
Time delay before availability	t_v	≤ 400 ms
Functional safety related parameters		
Performance level (PL)		up to PL c
$MTTF_d$		310 a
Mission Time (T_M)		20 a
Diagnostic Coverage (DC)		up to 60 % , see functional safety manual
Indicators/operating means		
LED yellow		object within measuring range
LED red/green		CANopen status display
Electrical specifications		
Operating voltage	U_B	9 ... 32 V
No-load supply current	I_0	≤ 100 mA
Power consumption	P_0	typ. 0.4 W , max. 1 W
Interface		
Interface type		CANopen
Process data		distance velocity signal quality cycle counter
Node ID		1 ... 127 , programmable
Transfer rate		125 kBit/s , 250 kBit/s , 500 kBit/s , 800 kBit/s , 1 MBit/s , programmable
Termination		external
Compliance with standards and directives		
Standard conformity		
Standards		EN 301489-1 EN 301489-3 EN 305550-1 EN 62368-1 EN 62311
Approvals and certificates		
UL approval		cULus
FCC approval		CFR Title 47, Part 15 FCC ID: IRE-MWL2A
ISED approval		IC ID: 7037A-MWL2A HVIN/PMN: MWL2A
Ambient conditions		
Ambient temperature		-40 ... 70 °C (-40 ... 158 °F)
Storage temperature		-40 ... 85 °C (-40 ... 185 °F)
Mechanical specifications		
Connection type		Connector plug
Degree of protection		IP68 / IP69

Release date: 2024-09-12 Date of issue: 2024-09-12 Filename: 70134318-100000_eng.pdf

Technical Data

Material		
Housing		PA-GF35 powder coated metal mounting flange
Radome		PTFE
Connector		
Threading		M12 x 1
Number of pins		5
Mass		180 g
Dimensions		
Height		40 mm
Width		40 mm
Length		83.3 mm
Factory settings		
Default setting		measured value "distance", measured value "velocity", signal quality, counter-2 (object 0x4000)
Sampling rate		50 Hz (object 0x4000)
Node ID		16
Transfer rate		250 kBit/s

Connection

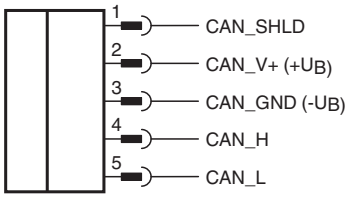

Connection Assignment

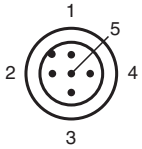

Release date: 2024-09-12 Date of issue: 2024-09-12 Filename: 70134318-100000_eng.pdf

Characteristic Curve

Characteristic response curve radar sensor

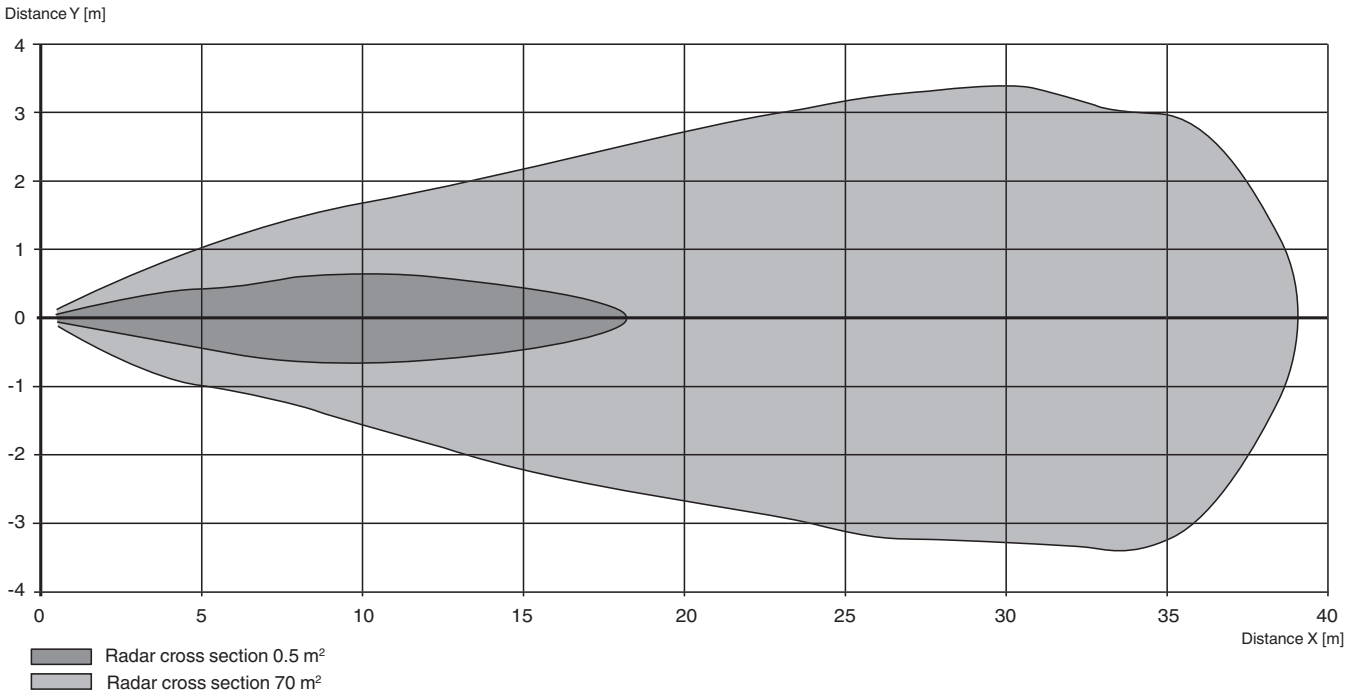

Technical Features

Emitted Interference and Interference Immunity Specifications

Mains-Borne Interference in Accordance with ISO 7637-2									
Pulse	1	2a	2b	3a	3b	4	5	5a	5b
Failure criterion	A	A	C	A	A	A	A	A	A

Interference Immunity	Coupling	Level	Failure Criterion
ISO 11452-2	–	30 V/m	–
EN 61000-4-2	Contact	8 kV	A
	Air	15 kV	A
EN 61000-4-3	–	11 V/m	A
EN 61000-4-4	Direct	1,1 kV	B
	Capacitiv	2,2 kV	B
EN 61000-4-6	–	15 V	A
EN 55011	Contact	Class B	–
EN 55011	Radiation	Class B	–

Release date: 2024-09-12 Date of issue: 2024-09-12 Filename: 70134318-100000_eng.pdf

Radar sensor

MWC25M-L2M-B16-0,3M-APS5P

- CANopen interface
- Sensing range up to 25 m
- Degree of protection IP68 / IP69
- High EMC resistance
- Sensor head bidirectional and rotatable
- Robust metall fastening

Radar sensor for distance and velocity measuring up to 25 m sensing range, with AMP connector

Function

The radar sensor series MWC25M with CANopen interface for medium distances up to 25 m range is optimized for use in industrial applications. Its compact cubic housing of the L2 series is proven in many industrial areas due to its high robustness.
Via Service Data Objects (SDOs), you can directly parameterize the radar sensor optimally for your application. Alternatively, parameterization with extended functionality is also possible using the FDT framework program PACTware and a DTM. This allows you to additionally use various evaluation and filter settings for distance and velocity values
The radar sensor operates according to the frequency modulated continuous wave (FMCW) method in the ISM band at 122 ... 123 GHz, approved for industrial use. In doing so, it emits a continuous radar signal that is varied over the frequency range of the ISM band. With this method, the sensor is able to reliably detect the distance and velocity of static and moving objects. When measuring velocity, the radar sensor detects the velocity of an object in the radial direction only, without measuring tangential velocities or velocity parts.

Dimensions

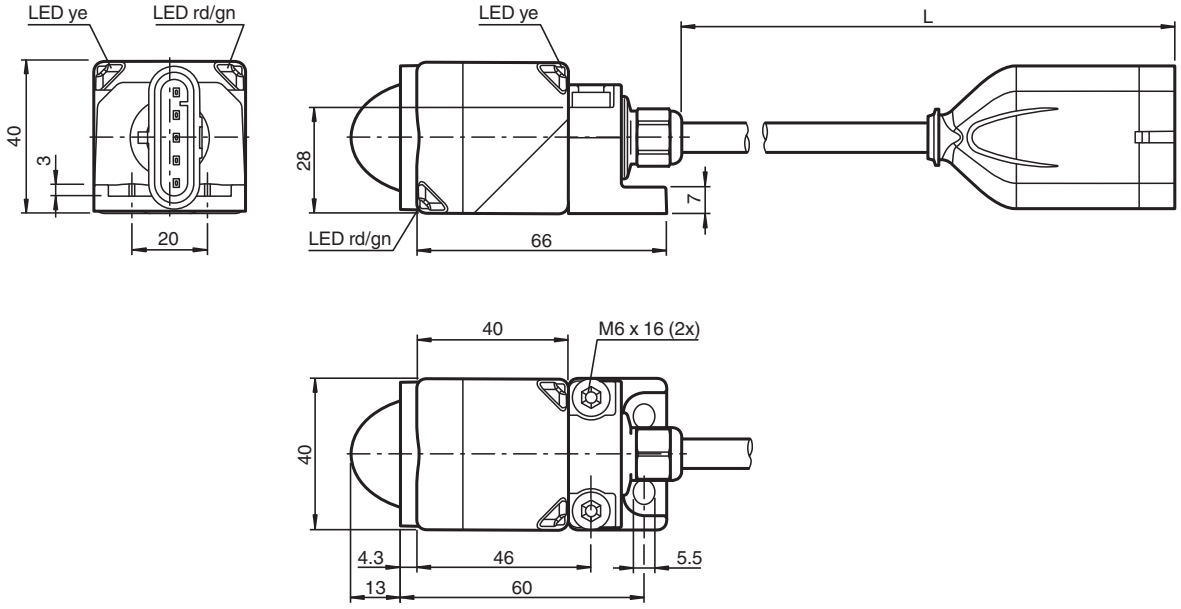

Technical Data

General specifications	
Measuring technology	FMCW

Release date: 2024-07-23 Date of issue: 2024-07-23 Filename: 70134318-100001_eng.pdf

Technical Data

Measured variable		distance velocity
Measurement range		
Distance		0.5 ... 25 m
Velocity		0.1 ... 80 m/s
Dead band		0 ... 0.5 m
Standard target plate		corner reflector 100 mm edge length
Working frequency		122.25 ... 123 GHz
Opening angle		< 12 ° (see characteristic curve)
Transmitter radiated power (EIRP)		< +20 dBm
Sampling rate		1 ... 200 Hz , programmable
Nominal ratings		
Linearity error		< ± 0.1 % of full-scale value (linearity error incl. temperature drift)
Repeat accuracy	R	1 mm
Resolution		distance 1 mm velocity 0.01 m/s
Time delay before availability	t_v	≤ 400 ms
Functional safety related parameters		
Performance level (PL)		up to PL c
$MTTF_d$		310 a
Mission Time (T_M)		20 a
Diagnostic Coverage (DC)		up to 60 % , see functional safety manual
Indicators/operating means		
LED yellow		object within measuring range
LED red/green		CANopen status display
Electrical specifications		
Operating voltage	U_B	9 ... 32 V
No-load supply current	I_0	≤ 100 mA
Power consumption	P_0	typ. 0.4 W , max. 1 W
Interface		
Interface type		CANopen
Process data		distance velocity signal quality cycle counter
Node ID		1 ... 127 , programmable
Transfer rate		125 kBit/s , 250 kBit/s , 500 kBit/s , 800 kBit/s , 1 MBit/s , programmable
Termination		external
Compliance with standards and directives		
Standard conformity		
Standards		EN 301489-1 EN 301489-3 EN 305550-1 EN 62368-1 EN 62311
Approvals and certificates		
UL approval		UL Recognized , General purpose , Class 2 power source
FCC approval		CFR Title 47, Part 15 FCC ID: IRE-MWL2A
ISED approval		IC ID: 7037A-MWL2A HVIN/PMN: MWL2A
Ambient conditions		
Ambient temperature		-40 ... 70 °C (-40 ... 158 °F)
Storage temperature		-40 ... 85 °C (-40 ... 185 °F)
Mechanical specifications		
Connection type		fixed cable with plug
Degree of protection		IP68 / IP69

Release date: 2024-07-23 Date of issue: 2024-07-23 Filename: 70134318-100001_eng.pdf

Technical Data

Material		
Housing		PA-GF35 powder coated metal mounting flange
Radome		PTFE
Connector		
Number of pins		5
Connection assembly		AMP connector Superseal 282107-1 AMP contact Superseal 282109-1
Cable		
Cable diameter		7.25 mm ± 0.2 mm
Bending radius		static min. 37.3 mm , dynamic min. 74.7 mm
Material		PUR
Color		black
Number of cores		5
Core cross section		0.8 mm^2
Length	L	345 mm ± 5 mm
Mass		238 g
Dimensions		
Height		40 mm
Width		40 mm
Length		83.3 mm
Factory settings		
Default setting		measured value "distance", measured value "velocity", signal quality, counter-2 (object 0x4000)
Sampling rate		50 Hz (object 0x4000)
Node ID		16
Transfer rate		250 kBit/s

Connection

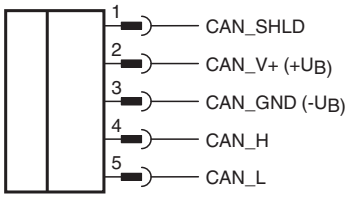

Connection Assignment

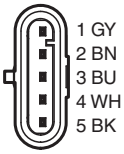

Release date: 2024-07-23 Date of issue: 2024-07-23 Filename: 70134318-100001_eng.pdf

Characteristic Curve

Characteristic response curve radar sensor

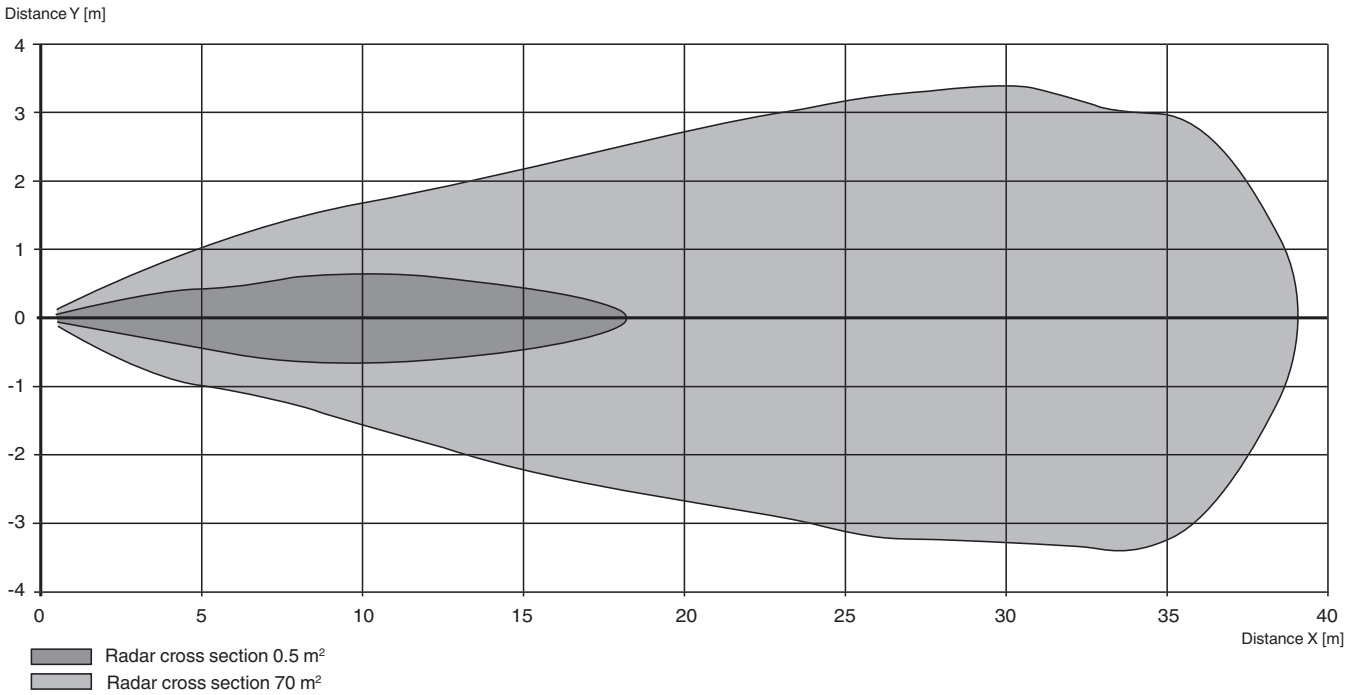

Technical Features

Emitted Interference and Interference Immunity Specifications

Mains-Borne Interference in Accordance with ISO 7637-2									
Pulse	1	2a	2b	3a	3b	4	5	5a	5b
Failure criterion	A	A	C	A	A	A	A	A	A

Interference Immunity	Coupling	Level	Failure Criterion
ISO 11452-2	–	30 V/m	–
EN 61000-4-2	Contact	8 kV	A
	Air	15 kV	A
EN 61000-4-3	–	11 V/m	A
EN 61000-4-4	Direct	1,1 kV	B
	Capacitiv	2,2 kV	B
EN 61000-4-6	–	15 V	A
EN 55011	Contact	Class B	–
EN 55011	Radiation	Class B	–

Release date: 2024-07-23 Date of issue: 2024-07-23 Filename: 70134318-100001_eng.pdf

Radar sensor

MWC25M-L2M-B16-0,3M-DT6P

- CANopen interface
- Sensing range up to 25 m
- Degree of protection IP68 / IP69
- High EMC resistance
- Sensor head bidirectional and rotatable
- Robust metall fastening

Radar sensor for distance and velocity measuring up to 25 m sensing range, with DEUTSCH connector

Function

The radar sensor series MWC25M with CANopen interface for medium distances up to 25 m range is optimized for use in industrial applications. Its compact cubic housing of the L2 series is proven in many industrial areas due to its high robustness.
Via Service Data Objects (SDOs), you can directly parameterize the radar sensor optimally for your application. Alternatively, parameterization with extended functionality is also possible using the FDT framework program PACTware and a DTM. This allows you to additionally use various evaluation and filter settings for distance and velocity values
The radar sensor operates according to the frequency modulated continuous wave (FMCW) method in the ISM band at 122 ... 123 GHz, approved for industrial use. In doing so, it emits a continuous radar signal that is varied over the frequency range of the ISM band. With this method, the sensor is able to reliably detect the distance and velocity of static and moving objects. When measuring velocity, the radar sensor detects the velocity of an object in the radial direction only, without measuring tangential velocities or velocity parts.

Dimensions

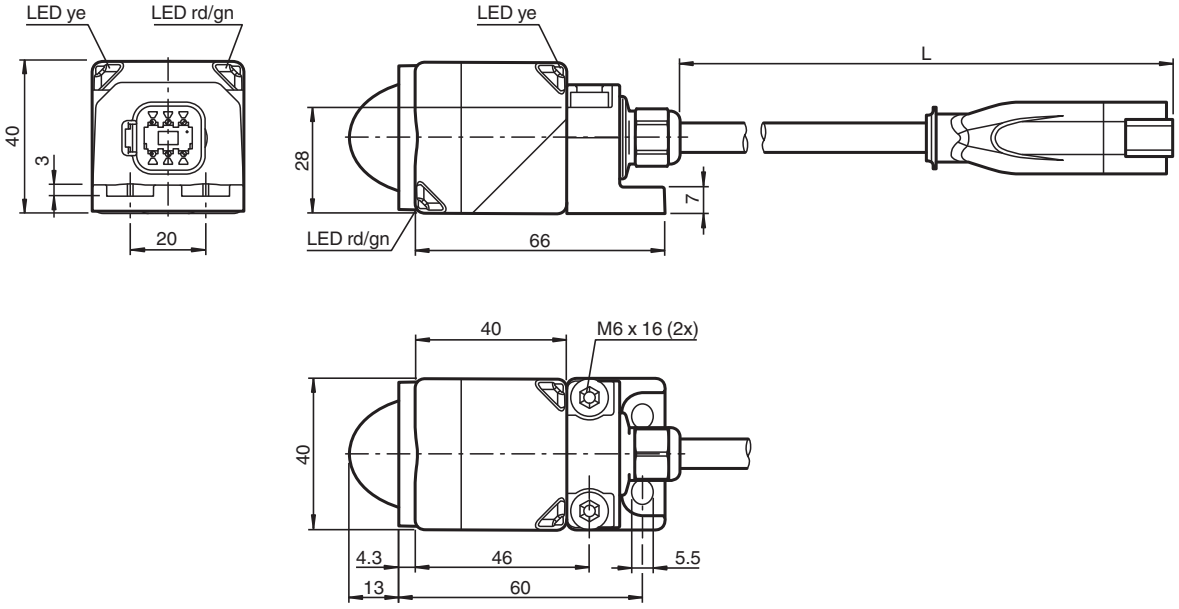

Technical Data

General specifications	
Measuring technology	FMCW

Release date: 2024-07-23 Date of issue: 2024-07-23 Filename: 70134318-100002_eng.pdf

Technical Data

Measured variable		distance velocity
Measurement range		
Distance		0.5 ... 25 m
Velocity		0.1 ... 80 m/s
Dead band		0 ... 0.5 m
Standard target plate		corner reflector 100 mm edge length
Working frequency		122.25 ... 123 GHz
Opening angle		< 12 ° (see characteristic curve)
Transmitter radiated power (EIRP)		< +20 dBm
Sampling rate		1 ... 200 Hz , programmable
Nominal ratings		
Linearity error		< ± 0.1 % of full-scale value (linearity error incl. temperature drift)
Repeat accuracy	R	1 mm
Resolution		distance 1 mm velocity 0.01 m/s
Time delay before availability	t_v	≤ 400 ms
Functional safety related parameters		
Performance level (PL)		up to PL c
$MTTF_d$		310 a
Mission Time (T_M)		20 a
Diagnostic Coverage (DC)		up to 60 % , see functional safety manual
Indicators/operating means		
LED yellow		object within measuring range
LED red/green		CANopen status display
Electrical specifications		
Operating voltage	U_B	9 ... 32 V
No-load supply current	I_0	≤ 100 mA
Power consumption	P_0	typ. 0.4 W , max. 1 W
Interface		
Interface type		CANopen
Process data		distance velocity signal quality cycle counter
Node ID		1 ... 127 , programmable
Transfer rate		125 kBit/s , 250 kBit/s , 500 kBit/s , 800 kBit/s , 1 MBit/s , programmable
Termination		external
Compliance with standards and directives		
Standard conformity		
Standards		EN 301489-1 EN 301489-3 EN 305550-1 EN 62368-1 EN 62311
Approvals and certificates		
UL approval		UL Recognized , General purpose , Class 2 power source
FCC approval		CFR Title 47, Part 15 FCC ID: IRE-MWL2A
ISED approval		IC ID: 7037A-MWL2A HVIN/PMN: MWL2A
Ambient conditions		
Ambient temperature		-40 ... 70 °C (-40 ... 158 °F)
Storage temperature		-40 ... 85 °C (-40 ... 185 °F)
Mechanical specifications		
Connection type		fixed cable with plug
Degree of protection		IP68 / IP69

Release date: 2024-07-23 Date of issue: 2024-07-23 Filename: 70134318-100002_eng.pdf

Technical Data

Material		
Housing		PA-GF35 powder coated metal mounting flange
Radome		PTFE
Connector		
Number of pins		6
Connection assembly		Deutsch connector DT04-6P-CE02 Deutsch contact 1060-16-0622 Deutsch wedge W6P
Cable		
Cable diameter		7.25 mm ± 0.2 mm
Bending radius		static min. 37.3 mm , dynamic min. 74.7 mm
Material		PUR
Color		black
Number of cores		5
Core cross section		0.8 mm^2
Length	L	352 mm ± 5 mm
Mass		238 g
Dimensions		
Height		40 mm
Width		40 mm
Length		83.3 mm
Factory settings		
Default setting		measured value "distance", measured value "velocity", signal quality, counter-2 (object 0x4000)
Sampling rate		50 Hz (object 0x4000)
Node ID		16
Transfer rate		250 kBit/s

Connection

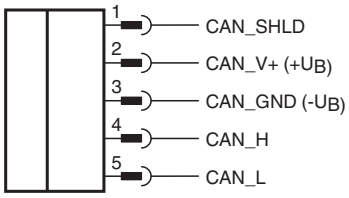

Connection Assignment

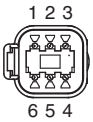

Release date: 2024-07-23 Date of issue: 2024-07-23 Filename: 70134318-100002_eng.pdf

Characteristic Curve

Characteristic response curve radar sensor

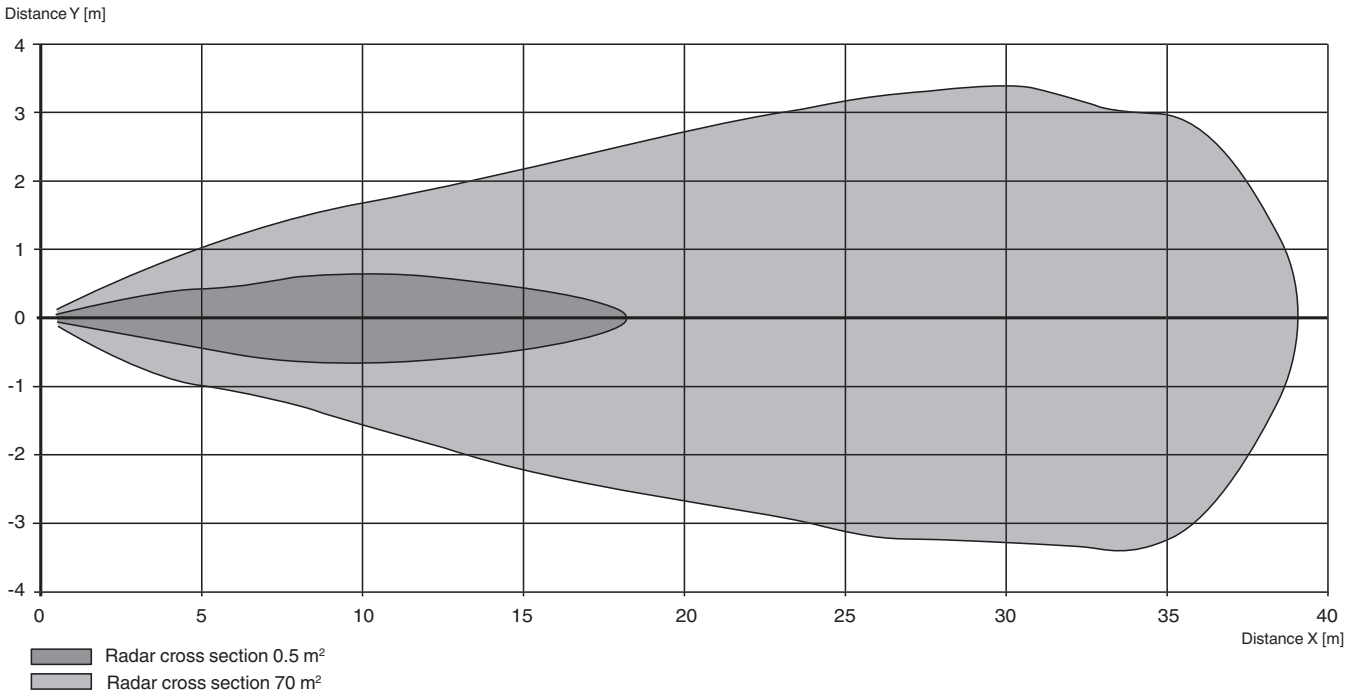

Technical Features

Emitted Interference and Interference Immunity Specifications

Mains-Borne Interference in Accordance with ISO 7637-2									
Pulse	1	2a	2b	3a	3b	4	5	5a	5b
Failure criterion	A	A	C	A	A	A	A	A	A

Interference Immunity	Coupling	Level	Failure Criterion
ISO 11452-2	–	30 V/m	–
EN 61000-4-2	Contact	8 kV	A
	Air	15 kV	A
EN 61000-4-3	–	11 V/m	A
EN 61000-4-4	Direct	1,1 kV	B
	Capacitiv	2,2 kV	B
EN 61000-4-6	–	15 V	A
EN 55011	Contact	Class B	–
EN 55011	Radiation	Class B	–

Release date: 2024-07-23 Date of issue: 2024-07-23 Filename: 70134318-100002_eng.pdf

Radar sensor

MWC25M-L2M-B20-V15

- CAN bus with SAE J1939 protocol
- Sensing range up to 25 m
- Degree of protection IP68 / IP69
- High EMC resistance
- Sensor head bidirectional and rotatable
- Robust metall fastening

Radar sensor for distance and velocity measuring up to 25 m measuring range

Function

The radar sensor series MWC25M with J1939 interface for medium distances up to 25 m range is optimized for use in industrial applications.Its compact cubic housing of the L2 series is proven in many industrial areas due to its high robustness.
Via Parameter Group Numbers (PGNs), you can directly parameterize the radar sensor optimally for your application. Alternatively, parameterization with extended functionality is also possible using the FDT framework program PACTware and a DTM. This allows you to additionally use various evaluation and filter settings for distance and velocity values.
The radar sensor operates according to the frequency modulated continuous wave (FMCW) method in the ISM band at 122 ... 123 GHz, approved for industrial use. In doing so, it emits a continuous radar signal that is varied over the frequency range of the ISM band. With this method, the sensor is able to reliably detect the distance and velocity of static and moving objects. When measuring velocity, the radar sensor detects the velocity of an object in the radial direction only, without measuring tangential velocities or velocity parts.

Dimensions

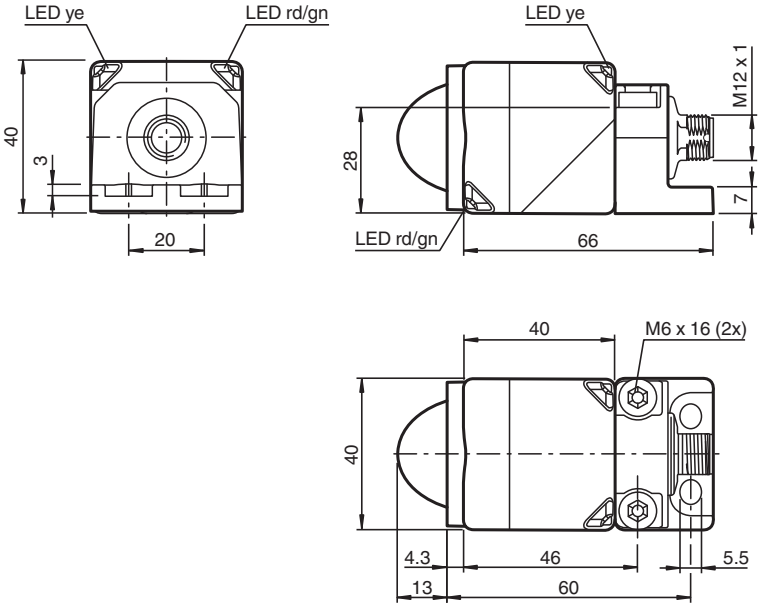

Technical Data

General specifications	
Measuring technology	FMCW

Release date: 2024-07-23 Date of issue: 2024-07-23 Filename: 70134318-100004_eng.pdf

Technical Data

Measured variable		distance velocity
Measurement range		
Distance		0.5 ... 25 m
Velocity		0.1 ... 80 m/s
Dead band		0 ... 0.5 m
Standard target plate		corner reflector 100 mm edge length
Working frequency		122.25 ... 123 GHz
Opening angle		< 12 ° (see characteristic curve)
Transmitter radiated power (EIRP)		< +20 dBm
Sampling rate		1 ... 200 Hz , programmable
Nominal ratings		
Linearity error		< ± 0.1 % of full-scale value (linearity error incl. temperature drift)
Repeat accuracy	R	1 mm
Resolution		distance 1 mm velocity 0.01 m/s
Time delay before availability	t_v	≤ 400 ms
Functional safety related parameters		
Performance level (PL)		up to PL c
$MTTF_d$		310 a
Mission Time (T_M)		20 a
Diagnostic Coverage (DC)		up to 60 % , see functional safety manual
Indicators/operating means		
LED yellow		object within measuring range
LED red/green		J1939 status display
Electrical specifications		
Operating voltage	U_B	9 ... 32 V
No-load supply current	I_0	≤ 100 mA
Power consumption	P_0	typ. 0.4 W , max. 1 W
Interface		
Interface type		J1939
Protocol		
Process data		status register distance signal quality cycle counter velocity
Transfer rate		250 kBit/s , 500 kBit/s , programmable
Termination		external
Supported baud rates		
Compliance with standards and directives		
Standard conformity		
Standards		EN 301489-1 EN 301489-3 EN 305550-1 EN 62368-1 EN 62311
Approvals and certificates		
UL approval		cULus
FCC approval		CFR Title 47, Part 15 FCC ID: IRE-MWL2A
ISED approval		IC ID: 7037A-MWL2A HVIN/PMN: MWL2A
Ambient conditions		
Ambient temperature		-40 ... 70 °C (-40 ... 158 °F)
Storage temperature		-40 ... 85 °C (-40 ... 185 °F)
Mechanical specifications		

Release date: 2024-07-23 Date of issue: 2024-07-23 Filename: 70134318-100004_eng.pdf

Technical Data

Connection type	Connector plug
Degree of protection	IP68 / IP69
Material	
Housing	PA-GF35 powder coated metal mounting flange
Radome	PTFE
Connector	
Threading	M12 x 1
Number of pins	5
Mass	180 g
Dimensions	
Height	40 mm
Width	40 mm
Length	83.3 mm
Factory settings	
Default setting	PGN "Distance and velocity"
Sampling rate	50 Hz
Transfer rate	250 kBit/s

Connection

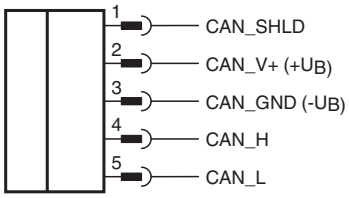

Connection Assignment

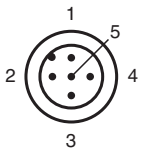

Release date: 2024-07-23 Date of issue: 2024-07-23 Filename: 70134318-100004_eng.pdf

Characteristic Curve

Characteristic response curve radar sensor

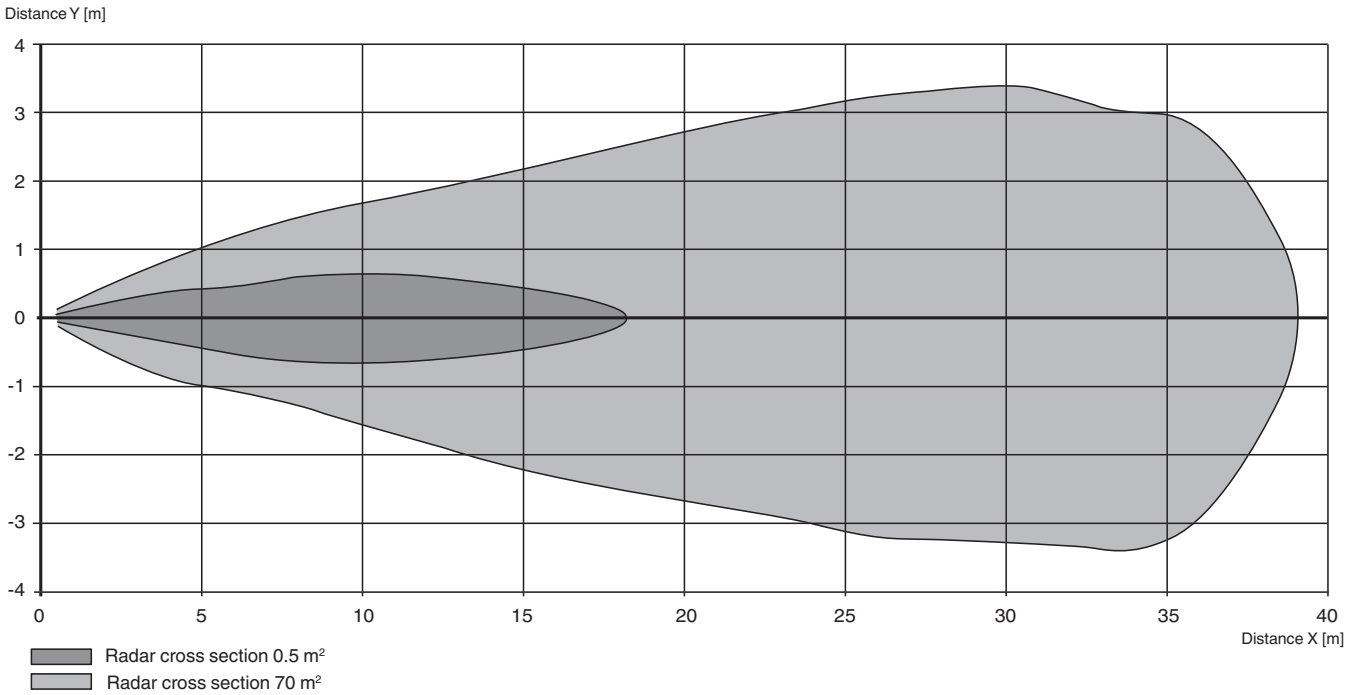

Technical Features

Emitted Interference and Interference Immunity Specifications

Mains-Borne Interference in Accordance with ISO 7637-2									
Pulse	1	2a	2b	3a	3b	4	5	5a	5b
Failure criterion	A	A	C	A	A	A	A	A	A

Interference Immunity	Coupling	Level	Failure Criterion
ISO 11452-2	–	30 V/m	–
EN 61000-4-2	Contact	8 kV	A
	Air	15 kV	A
EN 61000-4-3	–	11 V/m	A
EN 61000-4-4	Direct	1,1 kV	B
	Capacitiv	2,2 kV	B
EN 61000-4-6	–	15 V	A
EN 55011	Contact	Class B	–
EN 55011	Radiation	Class B	–

Release date: 2024-07-23 Date of issue: 2024-07-23 Filename: 70134318-100004_eng.pdf

Radar sensor

MWC25M-L2M-B20-0,3M-APS5P

- CAN bus with SAE J1939 protocol
- Sensing range up to 25 m
- Degree of protection IP68 / IP69
- High EMC resistance
- Sensor head bidirectional and rotatable
- Robust metall fastening

Radar sensor for distance and velocity measuring up to 25 m measuring range

Function

The radar sensor series MWC25M with J1939 interface for medium distances up to 25 m range is optimized for use in industrial applications.Its compact cubic housing of the L2 series is proven in many industrial areas due to its high robustness.
Via Parameter Group Numbers (PGNs), you can directly parameterize the radar sensor optimally for your application. Alternatively, parameterization with extended functionality is also possible using the FDT framework program PACTware and a DTM. This allows you to additionally use various evaluation and filter settings for distance and velocity values.
The radar sensor operates according to the frequency modulated continuous wave (FMCW) method in the ISM band at 122 ... 123 GHz, approved for industrial use. In doing so, it emits a continuous radar signal that is varied over the frequency range of the ISM band. With this method, the sensor is able to reliably detect the distance and velocity of static and moving objects. When measuring velocity, the radar sensor detects the velocity of an object in the radial direction only, without measuring tangential velocities or velocity parts.

Dimensions

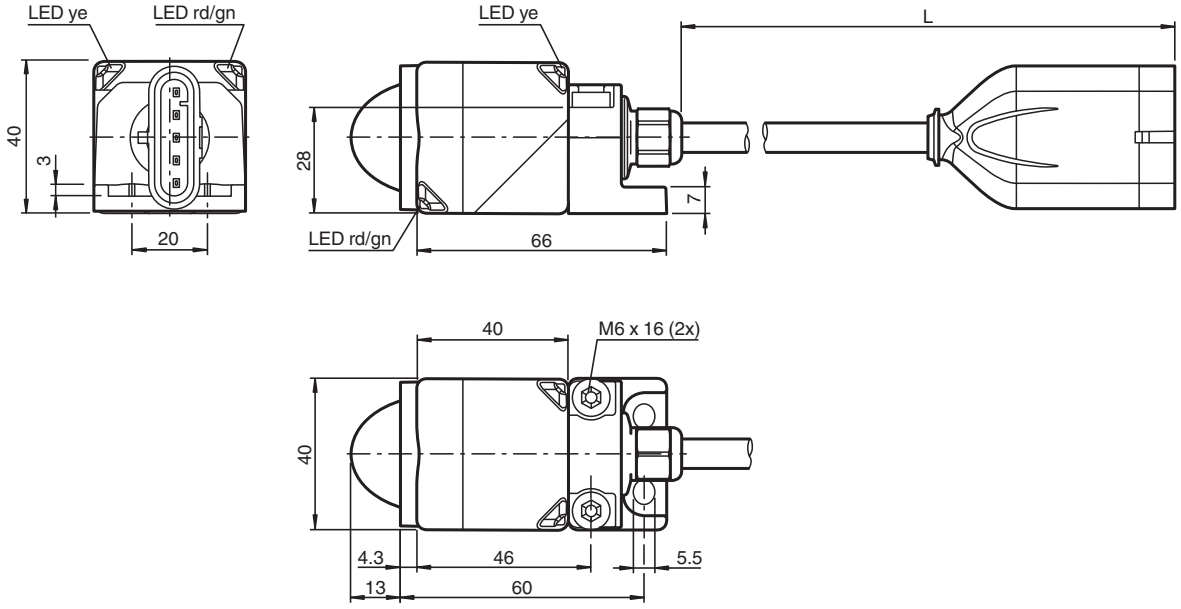

Technical Data

General specifications	
Measuring technology	FMCW

Release date: 2024-07-23 Date of issue: 2024-07-23 Filename: 70134318-100005_eng.pdf

Technical Data

Measured variable		distance velocity
Measurement range		
Distance		0.5 ... 25 m
Velocity		0.1 ... 80 m/s
Dead band		0 ... 0.5 m
Standard target plate		corner reflector 100 mm edge length
Working frequency		122.25 ... 123 GHz
Opening angle		< 12 ° (see characteristic curve)
Transmitter radiated power (EIRP)		< +20 dBm
Sampling rate		1 ... 200 Hz , programmable
Nominal ratings		
Linearity error		< ± 0.1 % of full-scale value (linearity error incl. temperature drift)
Repeat accuracy	R	1 mm
Resolution		distance 1 mm velocity 0.01 m/s
Time delay before availability	t_v	≤ 400 ms
Functional safety related parameters		
Performance level (PL)		up to PL c
$MTTF_d$		310 a
Mission Time (T_M)		20 a
Diagnostic Coverage (DC)		up to 60 % , see functional safety manual
Indicators/operating means		
LED yellow		object within measuring range
LED red/green		J1939 status display
Electrical specifications		
Operating voltage	U_B	9 ... 32 V
No-load supply current	I_0	≤ 100 mA
Power consumption	P_0	typ. 0.4 W , max. 1 W
Interface		
Interface type		J1939
Process data		status register distance signal quality cycle counter velocity
Transfer rate		250 kBit/s , 500 kBit/s , programmable
Termination		external
Compliance with standards and directives		
Standard conformity		
Standards		EN 301489-1 EN 301489-3 EN 305550-1 EN 62368-1 EN 62311
Approvals and certificates		
UL approval		UL Recognized , General purpose , Class 2 power source
FCC approval		CFR Title 47, Part 15 FCC ID: IRE-MWL2A
ISED approval		IC ID: 7037A-MWL2A HVIN/PMN: MWL2A
Ambient conditions		
Ambient temperature		-40 ... 70 °C (-40 ... 158 °F)
Storage temperature		-40 ... 85 °C (-40 ... 185 °F)
Mechanical specifications		
Connection type		fixed cable with plug
Degree of protection		IP68 / IP69

Release date: 2024-07-23 Date of issue: 2024-07-23 Filename: 70134318-100005_eng.pdf

Technical Data

Material		
Housing		PA-GF35 powder coated metal mounting flange
Radome		PTFE
Connector		
Number of pins		5
Connection assembly		AMP connector Superseal 282107-1 AMP contact Superseal 282109-1
Cable		
Cable diameter		7.25 mm ± 0.2 mm
Bending radius		static min. 37.3 mm , dynamic min. 74.7 mm
Material		PUR
Color		black
Number of cores		5
Core cross section		0.8 mm^2
Length	L	345 mm ± 5 mm
Mass		238 g
Dimensions		
Height		40 mm
Width		40 mm
Length		83.3 mm
Factory settings		
Default setting		PGN "Distance and velocity"
Sampling rate		50 Hz
Transfer rate		250 kBit/s

Connection

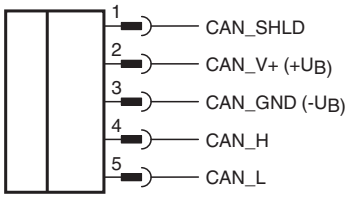

Connection Assignment

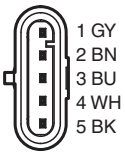

Release date: 2024-07-23 Date of issue: 2024-07-23 Filename: 70134318-100005_eng.pdf

Characteristic Curve

Characteristic response curve radar sensor

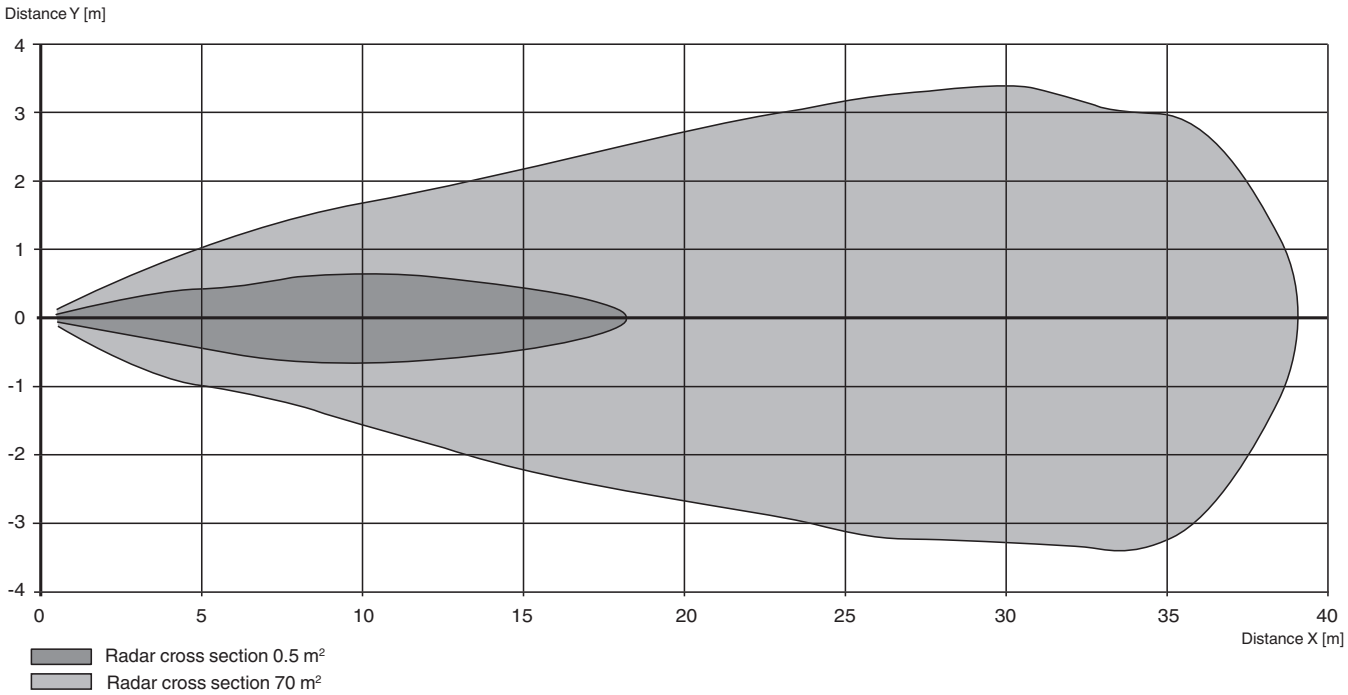

Technical Features

Emitted Interference and Interference Immunity Specifications

Mains-Borne Interference in Accordance with ISO 7637-2									
Pulse	1	2a	2b	3a	3b	4	5	5a	5b
Failure criterion	A	A	C	A	A	A	A	A	A

Interference Immunity	Coupling	Level	Failure Criterion
ISO 11452-2	–	30 V/m	–
EN 61000-4-2	Contact	8 kV	A
	Air	15 kV	A
EN 61000-4-3	–	11 V/m	A
EN 61000-4-4	Direct	1,1 kV	B
	Capacitiv	2,2 kV	B
EN 61000-4-6	–	15 V	A
EN 55011	Contact	Class B	–
EN 55011	Radiation	Class B	–

Release date: 2024-07-23 Date of issue: 2024-07-23 Filename: 70134318-100005_eng.pdf

Radar sensor

MWC25M-L2M-B20-0,3M-DT6P

- CAN bus with SAE J1939 protocol
- Sensing range up to 25 m
- Degree of protection IP68 / IP69
- High EMC resistance
- Sensor head bidirectional and rotatable
- Robust metall fastening

Radar sensor for distance and velocity measuring up to 25 m measuring range

Function

The radar sensor series MWC25M with J1939 interface for medium distances up to 25 m range is optimized for use in industrial applications.Its compact cubic housing of the L2 series is proven in many industrial areas due to its high robustness.
Via Parameter Group Numbers (PGNs), you can directly parameterize the radar sensor optimally for your application. Alternatively, parameterization with extended functionality is also possible using the FDT framework program PACTware and a DTM. This allows you to additionally use various evaluation and filter settings for distance and velocity values.
The radar sensor operates according to the frequency modulated continuous wave (FMCW) method in the ISM band at 122 ... 123 GHz, approved for industrial use. In doing so, it emits a continuous radar signal that is varied over the frequency range of the ISM band. With this method, the sensor is able to reliably detect the distance and velocity of static and moving objects. When measuring velocity, the radar sensor detects the velocity of an object in the radial direction only, without measuring tangential velocities or velocity parts.

Dimensions

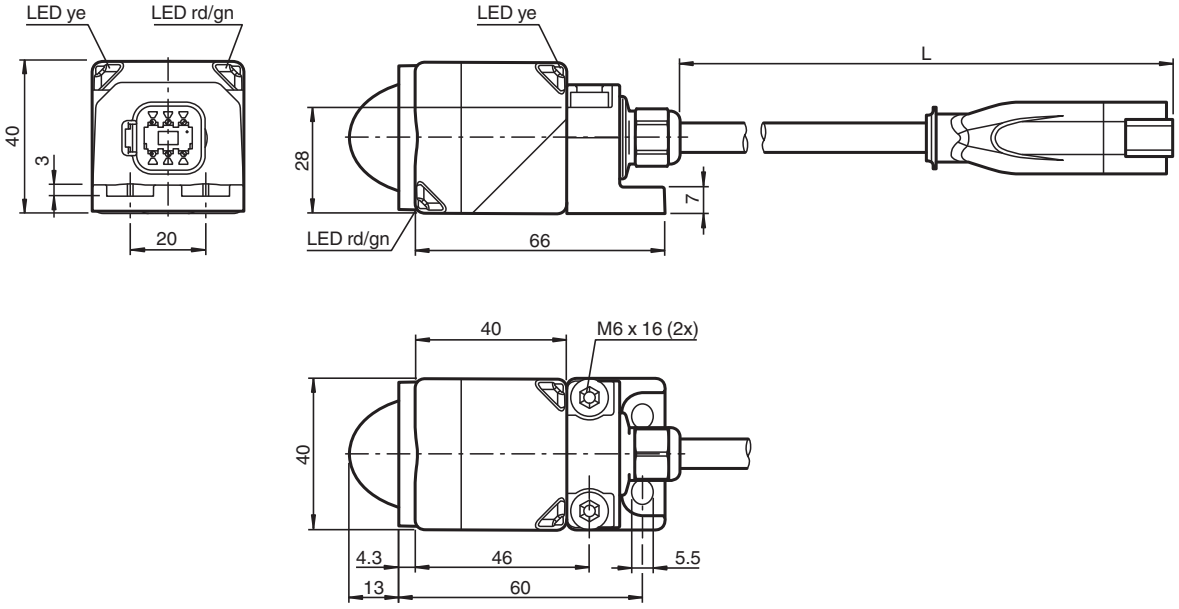

Technical Data

General specifications	
Measuring technology	FMCW

Release date: 2024-07-23 Date of issue: 2024-07-23 Filename: 70134318-100006_eng.pdf

Technical Data

Measured variable		distance velocity
Measurement range		
Distance		0.5 ... 25 m
Velocity		0.1 ... 80 m/s
Dead band		0 ... 0.5 m
Standard target plate		corner reflector 100 mm edge length
Working frequency		122.25 ... 123 GHz
Opening angle		< 12 ° (see characteristic curve)
Transmitter radiated power (EIRP)		< +20 dBm
Sampling rate		1 ... 200 Hz , programmable
Nominal ratings		
Linearity error		< ± 0.1 % of full-scale value (linearity error incl. temperature drift)
Repeat accuracy	R	1 mm
Resolution		distance 1 mm velocity 0.01 m/s
Time delay before availability	t_v	≤ 400 ms
Functional safety related parameters		
Performance level (PL)		up to PL c
$MTTF_d$		310 a
Mission Time (T_M)		20 a
Diagnostic Coverage (DC)		up to 60 % , see functional safety manual
Indicators/operating means		
LED yellow		object within measuring range
LED red/green		J1939 status display
Electrical specifications		
Operating voltage	U_B	9 ... 32 V
No-load supply current	I_0	≤ 100 mA
Power consumption	P_0	typ. 0.4 W , max. 1 W
Interface		
Interface type		J1939
Process data		status register distance signal quality cycle counter velocity
Transfer rate		250 kBit/s , 500 kBit/s , programmable
Termination		external
Compliance with standards and directives		
Standard conformity		
Standards		EN 301489-1 EN 301489-3 EN 305550-1 EN 62368-1 EN 62311
Approvals and certificates		
UL approval		UL Recognized , General purpose , Class 2 power source
FCC approval		CFR Title 47, Part 15 FCC ID: IRE-MWL2A
ISED approval		IC ID: 7037A-MWL2A HVIN/PMN: MWL2A
Ambient conditions		
Ambient temperature		-40 ... 70 °C (-40 ... 158 °F)
Storage temperature		-40 ... 85 °C (-40 ... 185 °F)
Mechanical specifications		
Connection type		fixed cable with plug
Degree of protection		IP68 / IP69

Release date: 2024-07-23 Date of issue: 2024-07-23 Filename: 70134318-100006_eng.pdf

Technical Data

Material		
Housing		PA-GF35 powder coated metal mounting flange
Radome		PTFE
Connector		
Number of pins		6
Connection assembly		Deutsch connector DT04-6P-CE02 Deutsch contact 1060-16-0622 Deutsch wedge W6P
Cable		
Cable diameter		7.25 mm ± 0.2 mm
Bending radius		static min. 37.3 mm , dynamic min. 74.7 mm
Material		PUR
Color		black
Number of cores		5
Core cross section		0.8 mm^2
Length	L	352 mm ± 5 mm
Mass		238 g
Dimensions		
Height		40 mm
Width		40 mm
Length		83.3 mm
Factory settings		
Default setting		PGN "Distance and velocity"
Sampling rate		50 Hz
Transfer rate		250 kBit/s

Connection

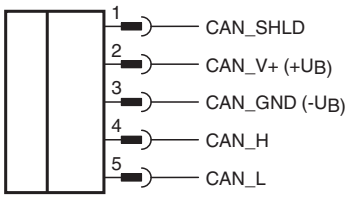

Connection Assignment

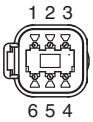

Release date: 2024-07-23 Date of issue: 2024-07-23 Filename: 70134318-100006_eng.pdf

Characteristic Curve

Characteristic response curve radar sensor

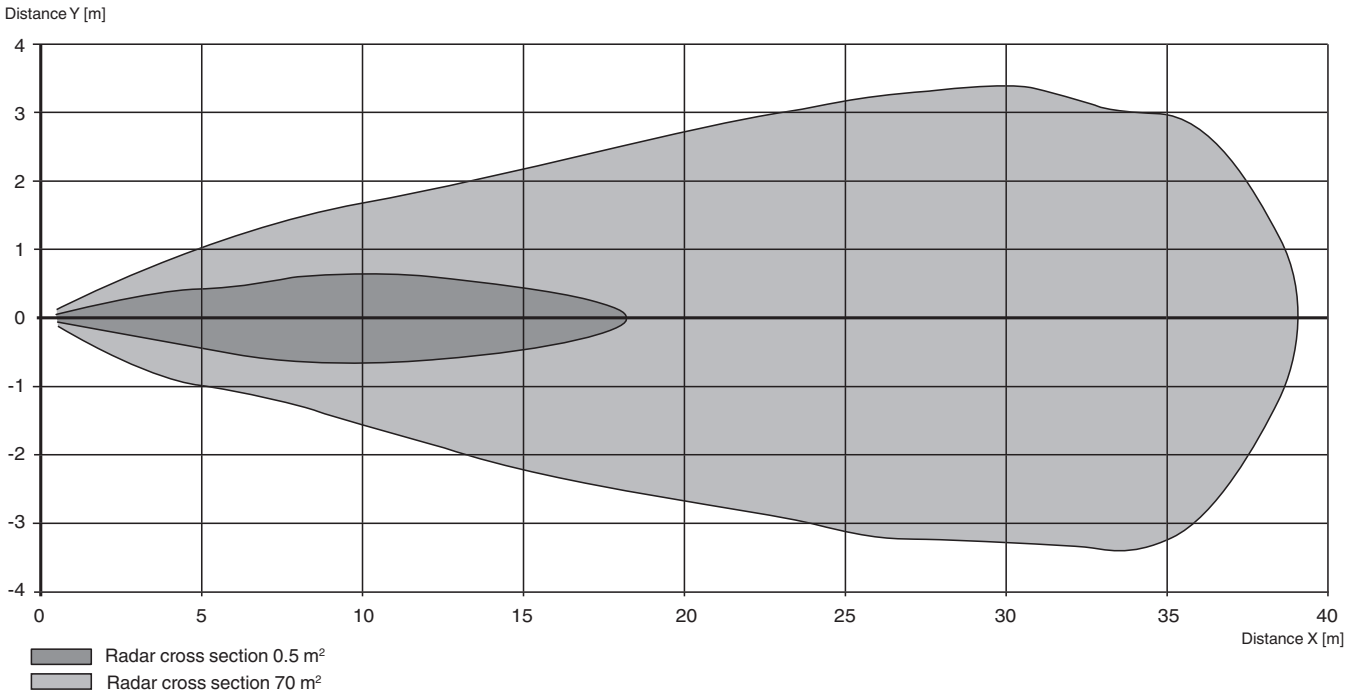

Technical Features

Emitted Interference and Interference Immunity Specifications

Mains-Borne Interference in Accordance with ISO 7637-2									
Pulse	1	2a	2b	3a	3b	4	5	5a	5b
Failure criterion	A	A	C	A	A	A	A	A	A

Interference Immunity	Coupling	Level	Failure Criterion
ISO 11452-2	–	30 V/m	–
EN 61000-4-2	Contact	8 kV	A
	Air	15 kV	A
EN 61000-4-3	–	11 V/m	A
EN 61000-4-4	Direct	1,1 kV	B
	Capacitiv	2,2 kV	B
EN 61000-4-6	–	15 V	A
EN 55011	Contact	Class B	–
EN 55011	Radiation	Class B	–

Release date: 2024-07-23 Date of issue: 2024-07-23 Filename: 70134318-100006_eng.pdf

Radar sensor

MWC25M-L2M-B20-2M

- CAN bus with SAE J1939 protocol
- Sensing range up to 25 m
- Degree of protection IP68 / IP69
- High EMC resistance
- Sensor head bidirectional and rotatable
- Robust metall fastening

Radar sensor for distance and velocity measuring up to 25 m measuring range

Function

The radar sensor series MWC25M with J1939 interface for medium distances up to 25 m range is optimized for use in industrial applications.Its compact cubic housing of the L2 series is proven in many industrial areas due to its high robustness.
Via Parameter Group Numbers (PGNs), you can directly parameterize the radar sensor optimally for your application. Alternatively, parameterization with extended functionality is also possible using the FDT framework program PACTware and a DTM. This allows you to additionally use various evaluation and filter settings for distance and velocity values.
The radar sensor operates according to the frequency modulated continuous wave (FMCW) method in the ISM band at 122 ... 123 GHz, approved for industrial use. In doing so, it emits a continuous radar signal that is varied over the frequency range of the ISM band. With this method, the sensor is able to reliably detect the distance and velocity of static and moving objects. When measuring velocity, the radar sensor detects the velocity of an object in the radial direction only, without measuring tangential velocities or velocity parts.

Dimensions

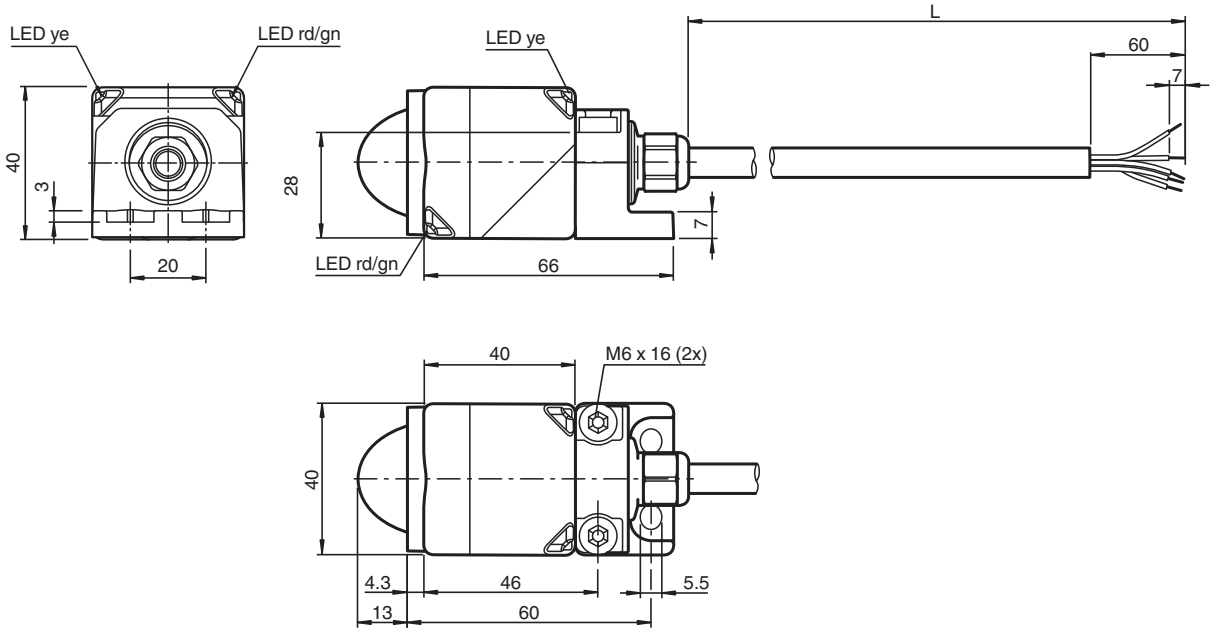

Technical Data

General specifications	
Measuring technology	FMCW

Release date: 2024-07-23 Date of issue: 2024-07-23 Filename: 70134318-100007_eng.pdf

Technical Data

Measured variable		distance velocity
Measurement range		
Distance		0.5 ... 25 m
Velocity		0.1 ... 80 m/s
Dead band		0 ... 0.5 m
Standard target plate		corner reflector 100 mm edge length
Working frequency		122.25 ... 123 GHz
Opening angle		< 12 ° (see characteristic curve)
Transmitter radiated power (EIRP)		< +20 dBm
Sampling rate		1 ... 200 Hz , programmable
Nominal ratings		
Linearity error		< ± 0.1 % of full-scale value (linearity error incl. temperature drift)
Repeat accuracy	R	1 mm
Resolution		distance 1 mm velocity 0.01 m/s
Time delay before availability	t_v	≤ 400 ms
Functional safety related parameters		
Performance level (PL)		up to PL c
$MTTF_d$		310 a
Mission Time (T_M)		20 a
Diagnostic Coverage (DC)		up to 60 % , see functional safety manual
Indicators/operating means		
LED yellow		object within measuring range
LED red/green		J1939 status display
Electrical specifications		
Operating voltage	U_B	9 ... 32 V
No-load supply current	I_0	≤ 100 mA
Power consumption	P_0	typ. 0.4 W , max. 1 W
Interface		
Interface type		J1939
Process data		status register distance signal quality cycle counter velocity
Transfer rate		250 kBit/s , 500 kBit/s , programmable
Termination		external
Compliance with standards and directives		
Standard conformity		
Standards		EN 301489-1 EN 301489-3 EN 305550-1 EN 62368-1 EN 62311
Approvals and certificates		
UL approval		cULus
FCC approval		CFR Title 47, Part 15 FCC ID: IRE-MWL2A
ISED approval		IC ID: 7037A-MWL2A HVIN/PMN: MWL2A
Ambient conditions		
Ambient temperature		-40 ... 70 °C (-40 ... 158 °F)
Storage temperature		-40 ... 85 °C (-40 ... 185 °F)
Mechanical specifications		
Connection type		cable
Degree of protection		IP68 / IP69

Release date: 2024-07-23 Date of issue: 2024-07-23 Filename: 70134318-100007_eng.pdf

Technical Data

Material		
Housing		PA-GF35 powder coated metal mounting flange
Radome		PTFE
Cable		
Cable diameter		7.25 mm ± 0.2 mm
Bending radius		static min. 37.3 mm , dynamic min. 74.7 mm
Material		PUR
Color		black
Number of cores		5
Core cross section		0.8 mm^2
Length	L	2000 mm ± 25 mm
Mass		335 g
Dimensions		
Height		40 mm
Width		40 mm
Length		83.3 mm
Factory settings		
Default setting		PGN "Distance and velocity"
Sampling rate		50 Hz
Transfer rate		250 kBit/s

Connection Assignment

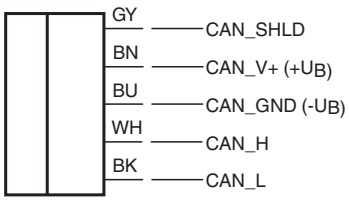

Connection Assignment

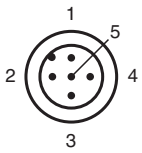

Release date: 2024-07-23 Date of issue: 2024-07-23 Filename: 70134318-100007_eng.pdf

Characteristic Curve

Characteristic response curve radar sensor

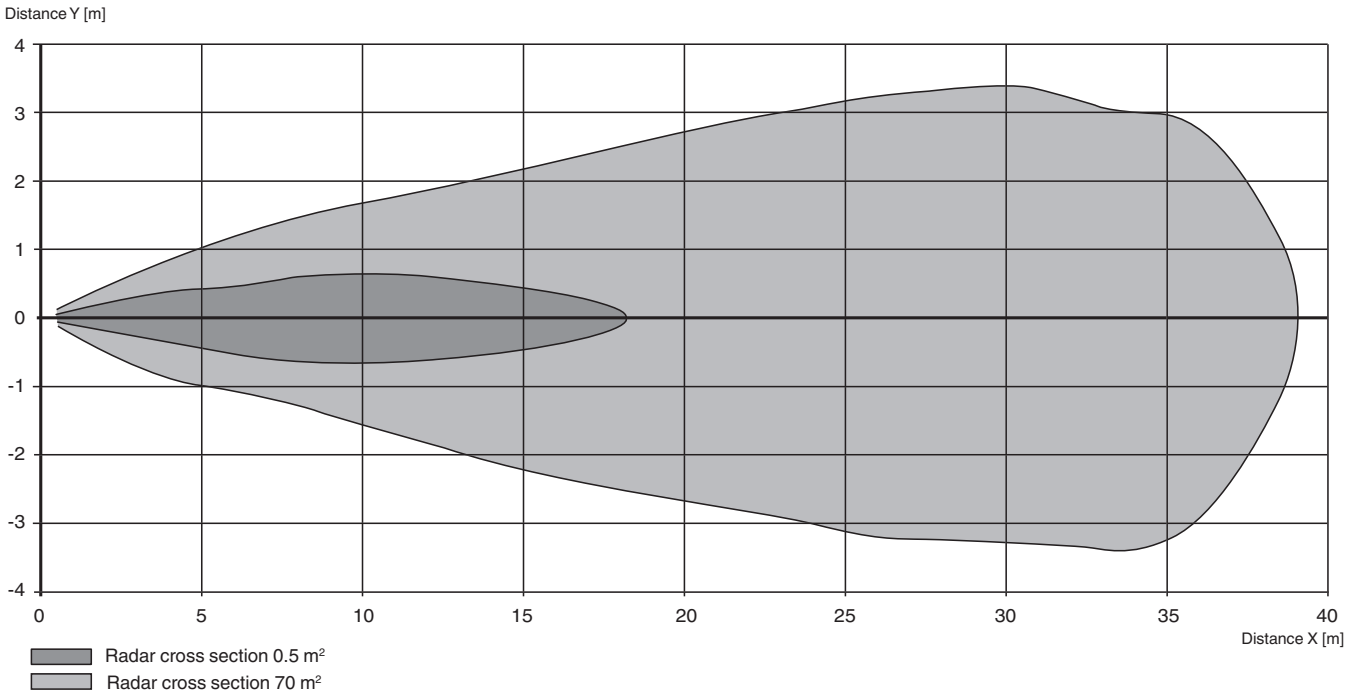

Technical Features

Emitted Interference and Interference Immunity Specifications

Mains-Borne Interference in Accordance with ISO 7637-2									
Pulse	1	2a	2b	3a	3b	4	5	5a	5b
Failure criterion	A	A	C	A	A	A	A	A	A

Interference Immunity	Coupling	Level	Failure Criterion
ISO 11452-2	–	30 V/m	–
EN 61000-4-2	Contact	8 kV	A
	Air	15 kV	A
EN 61000-4-3	–	11 V/m	A
EN 61000-4-4	Direct	1,1 kV	B
	Capacitiv	2,2 kV	B
EN 61000-4-6	–	15 V	A
EN 55011	Contact	Class B	–
EN 55011	Radiation	Class B	–

Release date: 2024-07-23 Date of issue: 2024-07-23 Filename: 70134318-100007_eng.pdf

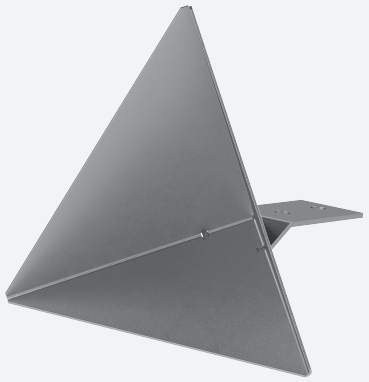

Radar corner reflector

MW-REF-M100

- Metal reflector to amplify the reflection signal
- Increasing the reflective properties of objects with low radar cross section
- Robust and weahterproof design
- Simple and fast mounting

Radar corner reflector, triangular 142.8 x 124.5 x 111.5 mm, with 2 mounting holes

Dimensions

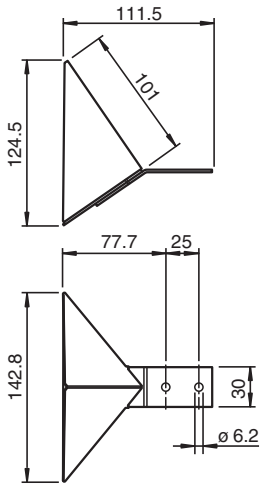

Technical Data

General specifications	
Suitable components	industrial radar sensors
Ambient conditions	
Ambient temperature	-40 ... 85 °C (-40 ... 185 °F)
Storage temperature	-40 ... 85 °C (-40 ... 185 °F)
Mechanical specifications	
Material	steel DC01, galvanized (electro-zink plated)
Mass	159 g
Mounting	mounting holes , Diameter: 6.2 mm

Release date: 2023-12-06 Date of issue: 2023-12-06 Filename: 70138261_eng.pdf

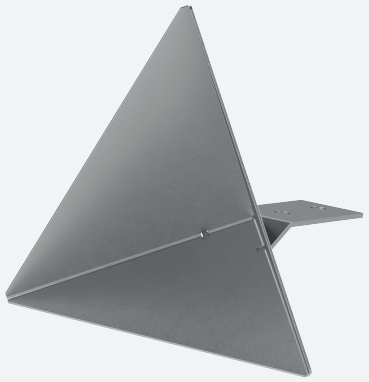

Radar corner reflector

MW-REF-M50

- Metal reflector to amplify the reflection signal
- Increasing the reflective properties of objects with low radar cross section
- Robust and weahterproof design
- Simple and fast mounting

Radar corner reflector, triangular 72.1 x 63.2 x 83.4 mm, with 2 mounting holes

Dimensions

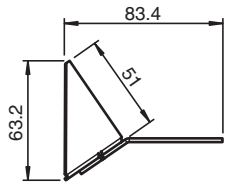

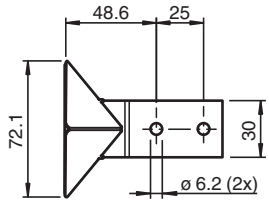

Technical Data

General specifications	
Suitable components	industrial radar sensors
Ambient conditions	
Ambient temperature	-40 ... 85 °C (-40 ... 185 °F)
Storage temperature	-40 ... 85 °C (-40 ... 185 °F)
Mechanical specifications	
Material	steel DC01, galvanized (electro-zink plated)
Mass	90 g
Mounting	mounting holes , Diameter: 6.2 mm

Release date: 2023-12-14 Date of issue: 2023-12-14 Filename: 70145508_eng.pdf

По вопросам продаж и поддержки обращайтесь:

Алматы (727)345-47-04
Ангарск (3955)60-70-56
Архангельск (8182)63-90-72
Астрахань (8512)99-46-04
Барнаул (3852)73-04-60
Белгород (4722)40-23-64
Благовещенск (4162)22-76-07
Брянск (4832)59-03-52
Владивосток (423)249-28-31
Владикавказ (8672)28-90-48
Владимир (4922)49-43-18
Волгоград (844)278-03-48
Вологда (8172)26-41-59
Воронеж (473)204-51-73
Екатеринбург (343)384-55-89
Иваново (4932)77-34-06
Ижевск (3412)26-03-58
Иркутск (395)279-98-46
Казань (843)206-01-48
Калининград (4012)72-03-81
Калуга (4842)92-23-67
Кемерово (3842)65-04-62
Киров (8332)68-02-04
Коломна (4966)23-41-49
Кострома (4942)77-07-48
Краснодар (861)203-40-90
Красноярск (391)204-63-61
Курск (4712)77-13-04
Курган (3522)50-90-47
Липецк (4742)52-20-81
Магнитогорск (3519)55-03-13
Москва (495)268-04-70
Мурманск (8152)59-64-93
Набережные Челны (8552)20-53-41
Нижний Новгород (831)429-08-12
Новокузнецк (3843)20-46-81
Ноябрьск (3496)41-32-12
Новосибирск (383)227-86-73
Омск (3812)21-46-40
Орел (4862)44-53-42
Оренбург (3532)37-68-04
Пенза (8412)22-31-16
Петрозаводск (8142)55-98-37
Псков (8112)59-10-37
Пермь (342)205-81-47
Ростов-на-Дону (863)308-18-15
Рязань (4912)46-61-64
Самара (846)206-03-16
Санкт-Петербург (812)309-46-40
Саратов (845)249-38-78
Севастополь (8692)22-31-93
Саранск (8342)22-96-24
Симферополь (3652)67-13-56
Смоленск (4812)29-41-54
Сочи (862)225-72-31
Ставрополь (8652)20-65-13
Сургут (3462)77-98-35
Сыктывкар (8212)25-95-17
Тамбов (4752)50-40-97
Тверь (4822)63-31-35
Тольятти (8482)63-91-07
Томск (3822)98-41-53
Тула (4872)33-79-87
Тюмень (3452)66-21-18
Ульяновск (8422)24-23-59
Улан-Удэ (3012)59-97-51
Уфа (347)229-48-12
Хабаровск (4212)92-98-04
Чебоксары (8352)28-53-07
Челябинск (351)202-03-61
Череповец (8202)49-02-64
Чита (3022)38-34-83
Якутск (4112)23-90-97
Ярославль (4852)69-52-93

Россия +7(495)268-04-70
Казахстан +7(727) 345-47-04
Беларусь +(375) 257-127-884
Узбекистан +998(71)205-18-59
Киргизия +996(312)96-26-47

эл.почта: phb@nt-rt.ru || сайт: https://pepperl-fuchs.nt-rt.ru/