Датчики LiDAR

Технические характеристики

По вопросам продаж и поддержки обращайтесь:

Алматы (727)345-47-04
Ангарск (3955)60-70-56
Архангельск (8182)63-90-72
Астрахань (8512)99-46-04
Барнаул (3852)73-04-60
Белгород (4722)40-23-64
Благовещенск (4162)22-76-07
Брянск (4832)59-03-52
Владивосток (423)249-28-31
Владикавказ (8672)28-90-48
Владимир (4922)49-43-18
Волгоград (844)278-03-48
Вологда (8172)26-41-59
Воронеж (473)204-51-73
Екатеринбург (343)384-55-89
Иваново (4932)77-34-06
Ижевск (3412)26-03-58
Иркутск (395)279-98-46
Казань (843)206-01-48
Калининград (4012)72-03-81
Калуга (4842)92-23-67
Кемерово (3842)65-04-62
Киров (8332)68-02-04
Коломна (4966)23-41-49
Кострома (4942)77-07-48
Краснодар (861)203-40-90
Красноярск (391)204-63-61
Курск (4712)77-13-04
Курган (3522)50-90-47
Липецк (4742)52-20-81
Магнитогорск (3519)55-03-13
Москва (495)268-04-70
Мурманск (8152)59-64-93
Набережные Челны (8552)20-53-41
Нижний Новгород (831)429-08-12
Новокузнецк (3843)20-46-81
Ноябрьск (3496)41-32-12
Новосибирск (383)227-86-73
Омск (3812)21-46-40
Орел (4862)44-53-42
Оренбург (3532)37-68-04
Пенза (8412)22-31-16
Петрозаводск (8142)55-98-37
Псков (8112)59-10-37
Пермь (342)205-81-47
Ростов-на-Дону (863)308-18-15
Рязань (4912)46-61-64
Самара (846)206-03-16
Санкт-Петербург (812)309-46-40
Саратов (845)249-38-78
Севастополь (8692)22-31-93
Саранск (8342)22-96-24
Симферополь (3652)67-13-56
Смоленск (4812)29-41-54
Сочи (862)225-72-31
Ставрополь (8652)20-65-13
Сургут (3462)77-98-35
Сыктывкар (8212)25-95-17
Тамбов (4752)50-40-97
Тверь (4822)63-31-35
Тольятти (8482)63-91-07
Томск (3822)98-41-53
Тула (4872)33-79-87
Тюмень (3452)66-21-18
Ульяновск (8422)24-23-59
Улан-Удэ (3012)59-97-51
Уфа (347)229-48-12
Хабаровск (4212)92-98-04
Чебоксары (8352)28-53-07
Челябинск (351)202-03-61
Череповец (8202)49-02-64
Чита (3022)38-34-83
Якутск (4112)23-90-97
Ярославль (4852)69-52-93

Россия +7(495)268-04-70
Казахстан +7(727) 345-47-04
Беларусь +(375) 257-127-884
Узбекистан +998(71)205-18-59
Киргизия +996(312)96-26-47

эл.почта: phb@nt-rt.ru || сайт: https://pepperl-fuchs.nt-rt.ru/

2-D LiDAR Sensor

OBD30M-R2000-4EP-V1V17-T-1L

- 4 freely programmable monitoring fields
- 4 inputs/outputs (selectable)
- High operating range
- High angle resolution
- Deep-freeze applications
- 360°-angle of measurement
- Measuring method PRT (Pulse Ranging Technology)

R2000 Detection, 2-D LiDAR sensor for precise field monitoring, measuring range to object up to 30 m with three M12 x 1 connector plugs

Function

Based on Pulse Ranging Technology (PRT), the sensor is powerful for measurements with a long range and a small light spot. The device scans its environment over the complete measuring angle of 360°. Due to the high scanning frequency, this sensor type is suitable for advanced applications. The device meets laser class 1 and is eye safe. Additional precautions to protect the operating personnel are not required. The interactive all-round display integrated in the optical surface can freely display individual texts and graphics. A wide range of accessories enables the sensor to be used in different applications. A PACTware device type manager (DTM) specially developed for this series offers extensive configuration and diagnostic options.

Dimensions

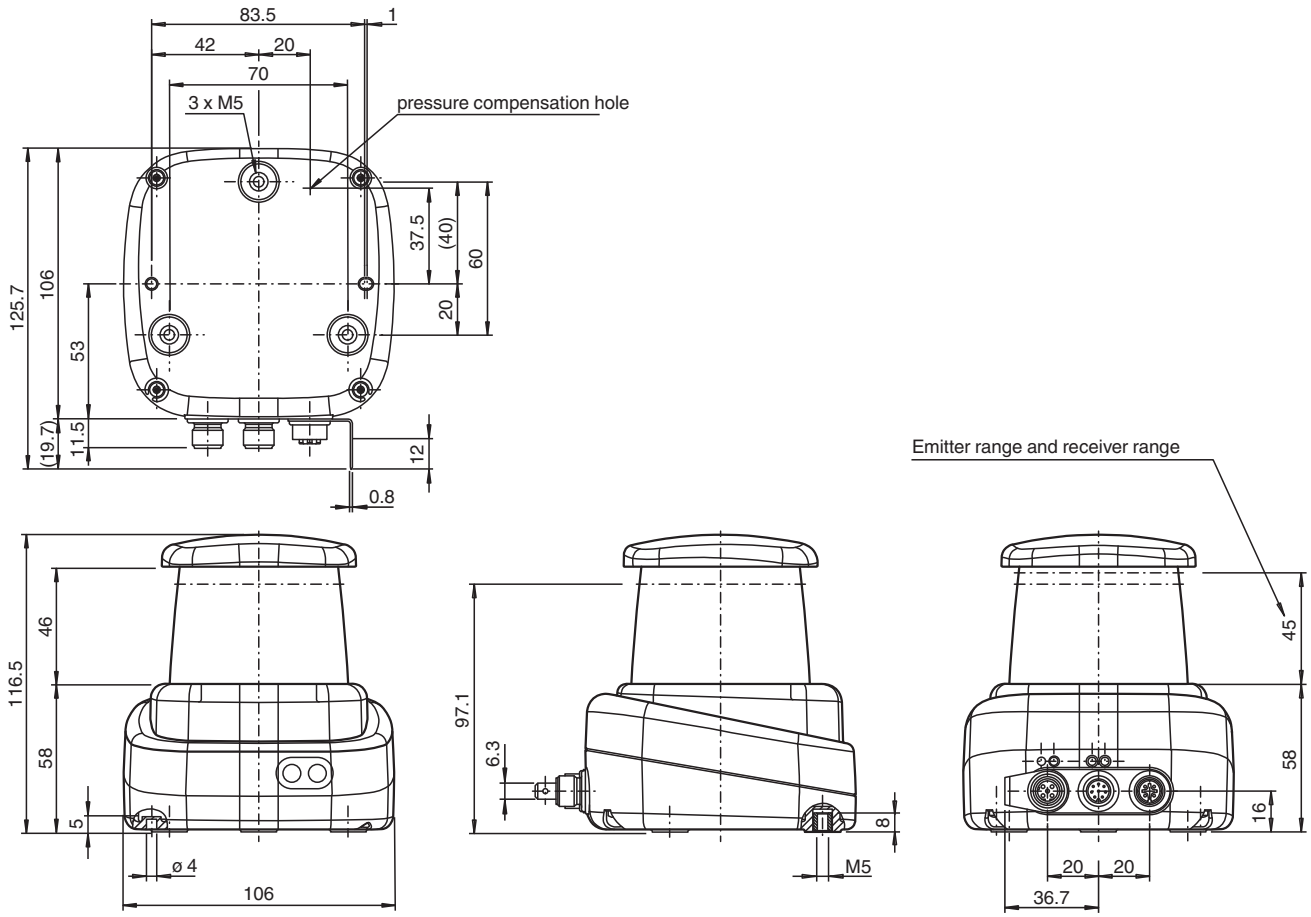

Technical Data

General specifications	
Measurement range	0.1 ... 10 m (bk 10%) 0,1 … 30 m (wh 90 %) 0,1 … 30 m (reflector) Min. reflectivity 2.5%
Light source	laser diode
Light type	modulated infrared light
Laser nominal ratings	
Note	LASER RADIATION , DO NOT STARE INTO BEAM
Laser class	1
Wave length	905 nm
Beam divergence	transversal 2 mrad , longitudinal 10 mrad
Pulse length	5 ns
Repetition rate	54 kHz
max. pulse energy	< 94 nJ
Measuring method	Pulse Ranging Technology (PRT)
Scan rate	10 Hz, 20 Hz, 30 Hz
Scanning angle	360°
Diameter of the light spot	25 mm x 105 mm at 10 m
Ambient light limit	80000 Lux
Functional safety related parameters	
$MTTF_d$	75 a
Mission Time (T_M)	20 a

Release date: 2024-09-17 Date of issue: 2024-09-17 Filename: 70112346_eng.pdf

Technical Data

Diagnostic Coverage (DC)		0 %
Indicators/operating means		
Operation indicator		LED green
Data flow indicator		LED yellow: active ethernet LED green: Ethernet link
Function indicator		LED red: fault LED yellow: Q1 + Q2
Control elements		2 Button
Parameterization indicator		24 x 252 pixels , red
Electrical specifications		
Operating voltage	U_B	10 ... 30 V DC
Ripple		10 % within the supply tolerance
No-load supply current	I_0	≤ 400 mA / 24 V DC
Power consumption	P_0	< 10 W
Time delay before availability	t_v	< 40 s
Integrated application		
Application		Field monitoring
Number of fields		4
Response time		30 ms + 1 Scan duration
Detectable object shape		Almost any
Object size		> 1 mm
Linking fields		Up to 4 x 3 levels
Interface		
Interface type		4 x switching inputs/outputs (selectable)
Input/Output		
Input/output type		4 Inputs/Outputs , Independently configurable , short circuit/reverse polarity protected
Input		
Switching threshold		low: Ue < 5 V, high: Ue > 10 V
Output		
Switching threshold		low: Ua < 1 V, high: Ua > Ub - 2 V
Switching current		100 mA per output
Conformity		
Laser safety		EN 60825-1:2014
Compliance with standards and directives		
Standard conformity		
Product standard		IEC 61000-6-2
Shock and impact resistance		EN 60068-2-6 EN 60068-2-27
Measurement accuracy		
Measuring speed		54000 measurements per second
Angle resolution		0,071°; 0,15°; 0,2°
Repeat accuracy		< 12 mm
Approvals and certificates		
Protection class		III (operating voltage 50 V)
UL approval		cULus Listed, Class 2 Power Source, Type 1 enclosure
CCC approval		CCC approval / marking not required for products rated ≤36 V
Ambient conditions		
Ambient temperature		-30 ... 50 °C (-22 ... 122 °F)
Storage temperature		-40 ... 70 °C (-40 ... 158 °F)
Relative humidity		95 % , no moisture condensation
Mechanical specifications		
Degree of protection		IP67

Release date: 2024-09-17 Date of issue: 2024-09-17 Filename: 70112346_eng.pdf

Technical Data

Connection	4-pin, M12x1 connector, standard (supply) , 8-pin, M12x1 connector, A-coded (MultiPort) , 4-pin, M12x1 socket, D-coded (LAN)
Material	
Housing	ABS + PC + Aluminum
Optical face	PMMA
Mass	approx. 0.8 kg
Dimensions	
Height	116.5 mm
Width	106 mm
Length	106 mm

Connection Assignment

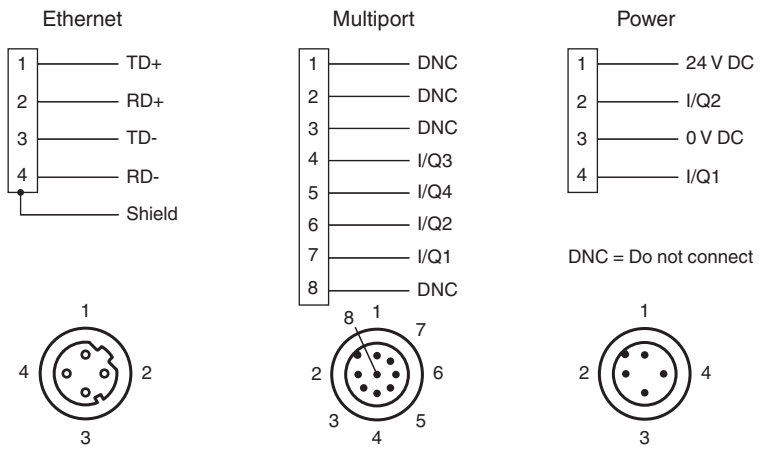

Assembly

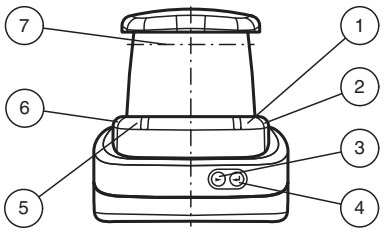

1	Operating status	green
2	Fault indication	red
3	Menu button	
4	Menu button	
5	Q2 signal indicator	yellow
6	Q1 signal indicator	yellow
7	Laser outlet	

Safety Information

Laser Class 1 Information
Maintenance and repairs should only be carried out by authorized service personnel!
Attach the device so that the warning is clearly visible and readable.
Caution – Use of controls or adjustments or performance of procedures other than those specified herein may result in hazardous radiation exposure.

Release date: 2024-09-17 Date of issue: 2024-09-17 Filename: 70112346_eng.pdf

2-D LiDAR Sensor

OMD8000-R2100-R2-2V15

- Measuring method PRT (Pulse Ranging Technology)
- Distance measurement using object
- Two-dimensional measurement with no moving parts
- Measurement using eye-safe LED technology
- 88° scanning angle

Multi-ray LED scanner for measuring the distance to an object, measuring method: PRT, measuring range: up to 8 m on white, 2x M12 plugs

Function

The new 2-dimensional multi-ray LED scanner uses tried-and-tested Pulse Ranging Technology and boasts a wide range of user-friendly features. The eye-safe LED technology in the sensor allows it to be used by personnel in all working areas without posing a danger. The 11 emitter elements arranged side by side span a scanning range of 88 degrees, while the emitter LEDs set themselves apart through their large light spot. Measuring on a surface rather than on a point makes it easier to measure inhomogeneous surfaces. A further highlight is the absence of any moving parts such as a motor or bearings, which makes the device less complex in its design and more resistant to mechanical stress.

Dimensions

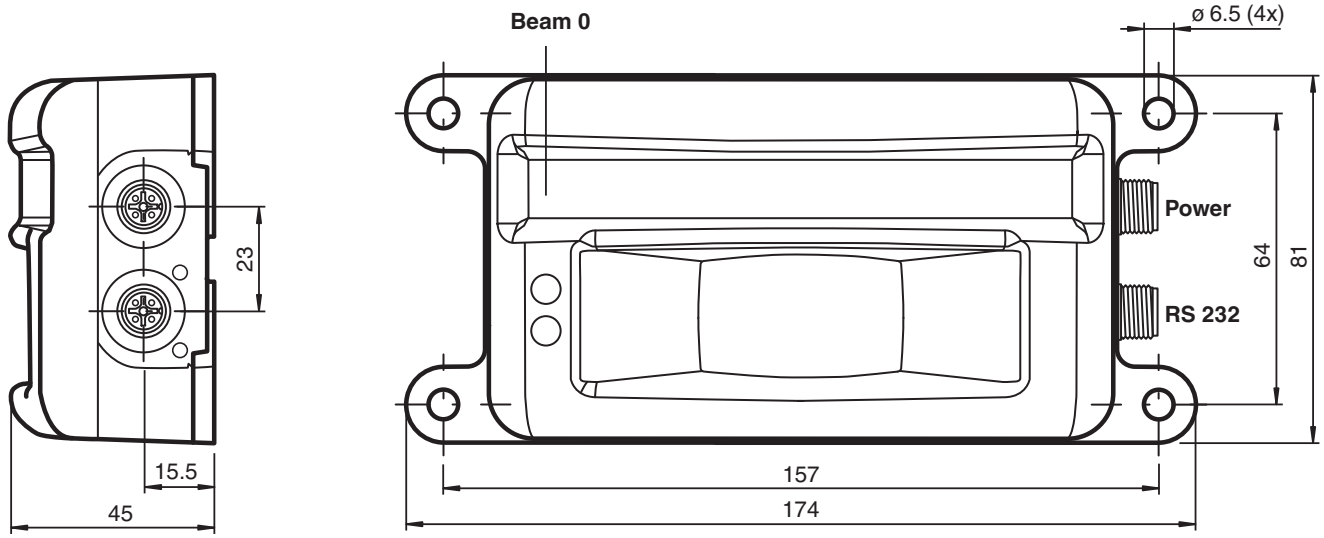

Release date: 2023-04-04 Date of issue: 2023-04-04 Filename: 264888_eng.pdf

Technical Data

General specifications		
Measurement range		0.2 ... 2 m (bw 6%) 0.2 ... 8 m (wh 90%)
Light source		IRED
Light type		modulated infrared light , 850 nm
Measuring method		Pulse Ranging Technology (PRT)
Scan rate		50 s^{-1} (1 scan = 11 measurements)
Scanning angle		88°
Diameter of the light spot		550 mm at 4 m (orthogonal)
Ambient light limit		> 80000 Lux
Resolution		1 mm
Functional safety related parameters		
$MTTF_d$		123 a
Mission Time (T_M)		20 a
Diagnostic Coverage (DC)		0 %
Indicators/operating means		
Operation indicator		LED green
Function indicator		LED yellow
Electrical specifications		
Operating voltage	U_B	10 ... 30 V DC
Ripple		10 % within the supply tolerance
No-load supply current	I_0	≤ 120 mA / 24 V DC
Protection class		III
Time delay before availability	t_v	< 3 s
Interface		
Interface type		RS 232
Protocol		P+F R2100 115k, 8N1
Conformity		
Product standard		EN 60947-5-2
Measurement accuracy		
Measured value noise		20 mm (1 sigma, 4 m on white, orthogonal)
Angle resolution		8 °
Absolute accuracy		+/- 50 mm (orthogonal)
Approvals and certificates		
UL approval		cULus Listed, Class 2 Power Source, Type 1 enclosure
CCC approval		CCC approval / marking not required for products rated ≤36 V
Ambient conditions		
Ambient temperature		-30 ... 60 °C (-22 ... 140 °F) UL: -10 ... 50 °C (14 ... 122 °F)
Storage temperature		-30 ... 70 °C (-22 ... 158 °F)
Relative humidity		95 % , no moisture condensation
Mechanical specifications		
Housing width		81 mm
Housing height		45 mm
Degree of protection		IP67
Connection		5-pin, M12x1 connector, standard (supply; color black) 5-pin, M12x1 connector, standard (RS 232; color grey; shielded)
Material		
Housing		plastic
Optical face		Lexan (PC)
Mass		approx. 250 g

Release date: 2023-04-04 Date of issue: 2023-04-04 Filename: 264888_eng.pdf

Connection Assignment

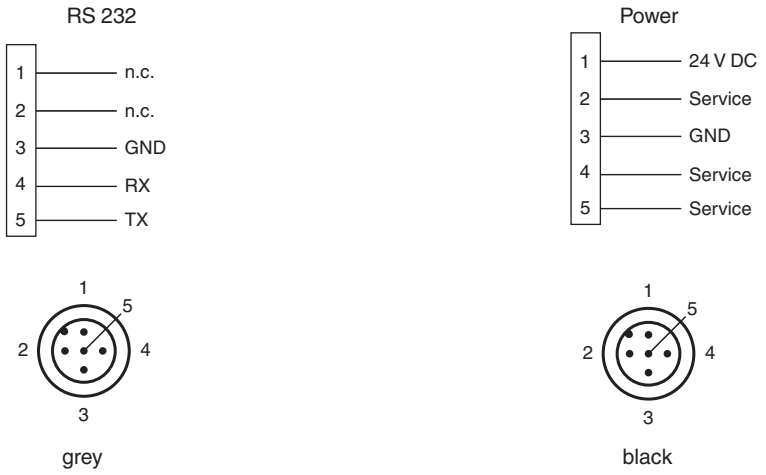

Assembly

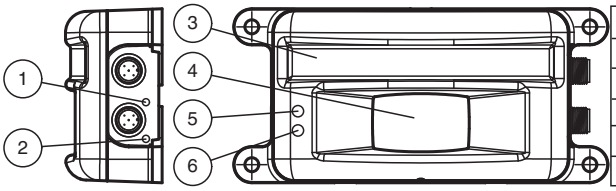

1	No function	
2	No function	
3	Emitter	
4	Receiver	
5	Function indicator	yellow
6	Operating indicator	green

Installation

Installation Instructions for North America
If a connection is made to the M12 multi-pin connector, the product shall be used with a UL-listed cable/connector (CYJV) assembly rated minimum 30 V DC, minimum 1.0 A, in the final installation for power supply.

Characteristic Curve

Echoamplitude characteristic

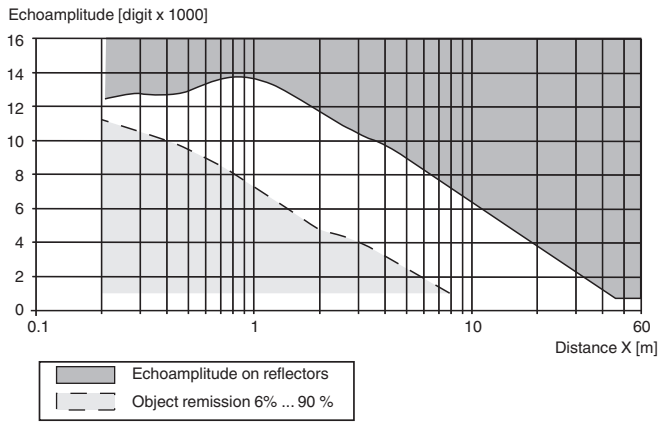

Release date: 2023-04-04 Date of issue: 2023-04-04 Filename: 264888_eng.pdf

Characteristic Curve

Beam geometry

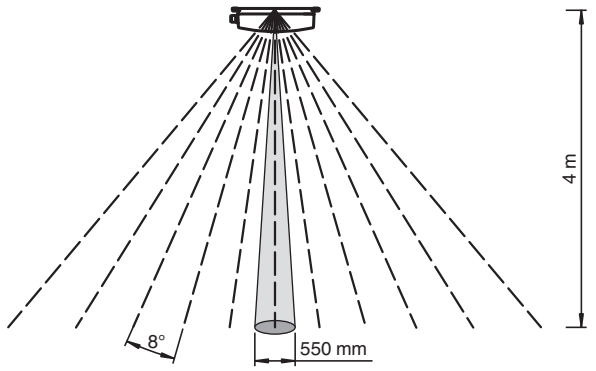

Accessories

	V1-G-2M-PUR	Female cordset single-ended M12 straight A-coded, 4-pin, PUR cable grey
	V1-W-2M-PUR	Female cordset single-ended M12 angled A-coded, 4-pin, PUR cable grey
	V15-G-5M-PUR-ABG	Female cordset single-ended M12 straight A-coded, 5-pin, PUR cable grey, shielded
	V1-G-BK5M-PUR-U	Female cordset single-ended M12 straight A-coded, 4-pin, PUR cable black, UL approved, drag chain suitable, torsion resistant
	V1-W-BK5M-PUR-U	Female cordset single-ended M12 angled A-coded, 4-pin, PUR cable black, UL approved, drag chain suitable, torsion resistant
	V15-G-2M-PVC-SUBD9	Adapter cable M12 socket straight A-coded 5-pin to Sub-D-plug 9-pin, PVC cable grey

Release date: 2023-04-04 Date of issue: 2023-04-04 Filename: 264888_eng.pdf

2-D LiDAR Sensor

OMD10M-R2000-B23-V1V1D

- Very high angle resolution
- Red laser as the light emitter
- Measuring method PRT (Pulse Ranging Technology)
- Flexible measured data filter

R2000 UHD, 2-D LiDAR sensor for precise and highly dynamic positioning, measuring range to object up to 10 m, Ethernet

Function

Based on Pulse Ranging Technology (PRT), the sensor is powerful for measurements with a long range and a small light spot. The device scans its environment over the complete measuring angle of 360°. Due to the high scanning frequency, this sensor type is suitable for advanced applications. The device meets laser class 1 and is eye safe. Additional precautions to protect the operating personnel are not required. The interactive all-round display integrated in the optical surface can freely display individual texts and graphics. A wide range of accessories enables the sensor to be used in different applications. A PACTware device type manager (DTM) specially developed for this series offers extensive configuration and diagnostic options.

Dimensions

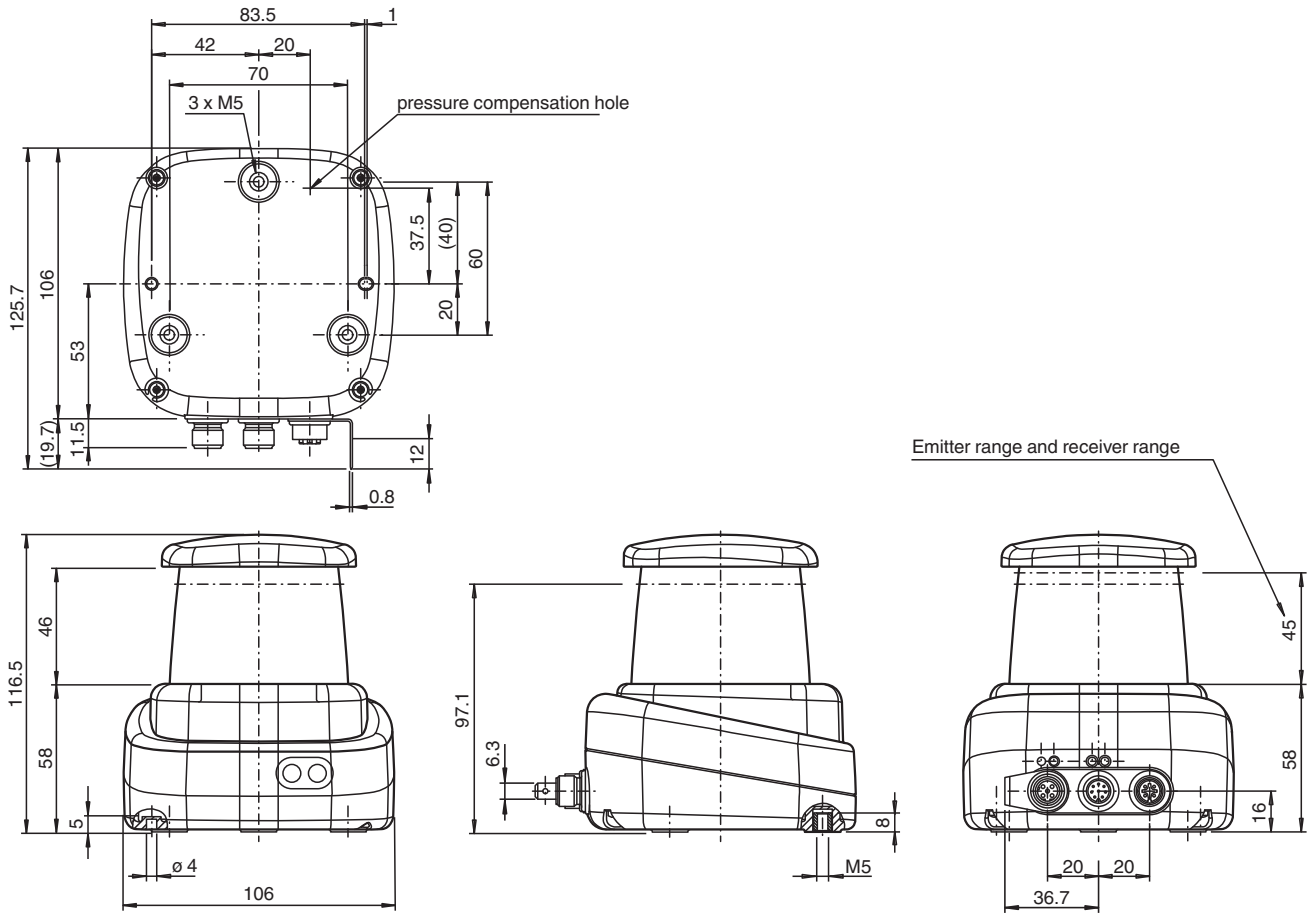

Technical Data

General specifications	
Measurement range	0.3 ... 3 m (bk 10%) 0.2 to 10 m (wh 90%) 0.2 to 60 m (reflector)
Light source	laser diode
Light type	modulated visible red light
Laser nominal ratings	
Note	LASER LIGHT , DO NOT STARE INTO BEAM
Laser class	1
Wave length	660 nm
Beam divergence	1 mrad
Pulse length	5 ns
Repetition rate	250 kHz
max. pulse energy	< 4 nJ
Measuring method	Pulse Ranging Technology (PRT)
Scan rate	10 ... 50 s^{-1}
Scanning angle	360°
Diameter of the light spot	< 20 mm at 10 m
Filter	Maximum, average, median, reflectivity
Ambient light limit	80000 Lux
Resolution	1 mm
Functional safety related parameters	
$MTTF_d$	75 a

Release date: 2024-03-18 Date of issue: 2024-03-18 Filename: 305983_eng.pdf

Technical Data

Mission Time (T_M)		20 a
Diagnostic Coverage (DC)		0 %
Indicators/operating means		
Operation indicator		LED green
Data flow indicator		LED yellow: active ethernet LED green: Ethernet link
Function indicator		LED red: fault LED yellow: Q1 + Q2
Control elements		2 Button
Parameterization indicator		24 x 252 pixels , red
Electrical specifications		
Operating voltage	U_B	10 ... 30 V DC
Ripple		10 % within the supply tolerance
No-load supply current	I_0	≤ 400 mA / 24 V DC
Power consumption	P_0	< 10 W
Time delay before availability	t_v	< 40 s
Interface		
Interface type		Fast Ethernet, 2 switching outputs
Protocol		HTTP , TCP/IP and UDP/IP
Input/Output		
Input/output type		2 Inputs/Outputs , Independently configurable , short circuit/reverse polarity protected
Output		
Switching threshold		low: Ua < 1 V, high: Ua > Ub - 2 V
Switching current		100 mA per output
Conformity		
Laser safety		EN 60825-1:2014
Compliance with standards and directives		
Standard conformity		
Product standard		IEC 60947-5-2
Shock and impact resistance		EN 60068-2-6 EN 60068-2-27
Measurement accuracy		
Measuring speed		250000 measurements per second
Measured value noise		± 9 mm (1 sigma, on reflector film) with measured value filter deactivated
Angle resolution		0.014 °
Absolute accuracy		typ. ± 35 mm
Repeat accuracy		< 12 mm
Approvals and certificates		
Protection class		III (operating voltage 50 V)
UL approval		cULus Listed, Class 2 Power Source, Type 1 enclosure
CCC approval		CCC approval / marking not required for products rated ≤36 V
Ambient conditions		
Ambient temperature		-10 ... 50 °C (14 ... 122 °F)
Storage temperature		-20 ... 70 °C (-4 ... 158 °F)
Relative humidity		95 % , no moisture condensation
Mechanical specifications		
Degree of protection		IP65
Connection		4-pin, M12x1 connector, standard (supply) , 8-pin, M12x1 connector, A-coded (MultiPort) , 4-pin, M12x1 socket, D-coded (LAN)
Material		
Housing		ABS + PC + Aluminum
Optical face		PMMA
Mass		approx. 0.8 kg
Dimensions		

Release date: 2024-03-18 Date of issue: 2024-03-18 Filename: 305983_eng.pdf

Technical Data

Height	116.5 mm
Width	106 mm
Length	106 mm

Connection Assignment

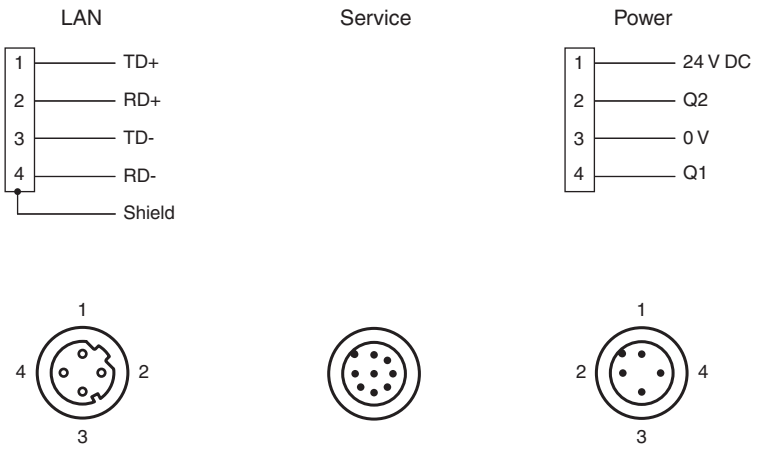

Assembly

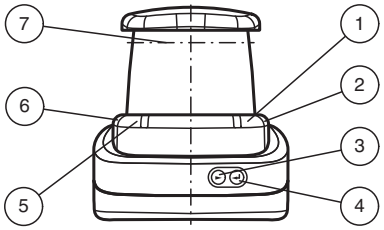

1	Operating status	green
2	Fault indication	red
3	Menu button	
4	Menu button	
5	Q2 signal indicator	yellow
6	Q1 signal indicator	yellow
7	Laser outlet	

Characteristic Curve

Echoamplitude characteristic

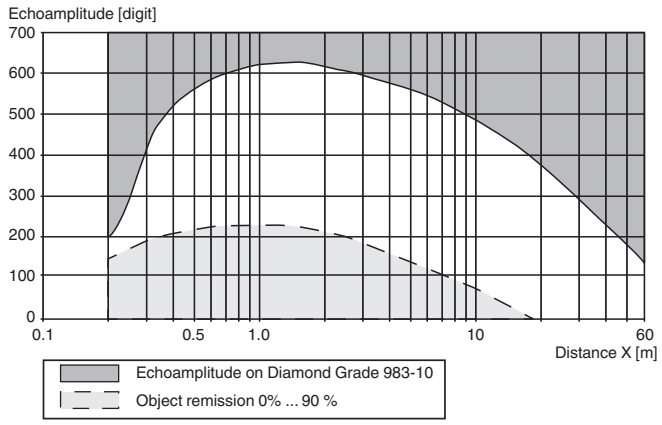

Release date: 2024-03-18 Date of issue: 2024-03-18 Filename: 305983_eng.pdf

Safety Information

Safety Information

Laser Class 1 Information

- The irradiation can lead to irritation especially in a dark environment. Do not point at people!
- Maintenance and repairs should only be carried out by authorized service personnel!
- Caution – Use of controls or adjustments or performance of procedures other than those specified herein may result in hazardous radiation exposure.

Release date: 2024-03-18 Date of issue: 2024-03-18 Filename: 305983_eng.pdf

2-D LiDAR Sensor

OMD12M-R2000-B23-V1V1D-HD-1L

- Middle operating range
- High angle resolution
- Infrared light
- Measuring method PRT (Pulse Ranging Technology)

R2000 HD, 2-D LiDAR sensor for simple measurement tasks and positioning, measuring range to object up to 12 m, Ethernet

Function

Based on Pulse Ranging Technology (PRT), the sensor is powerful for measurements with a long range and a small light spot. The device scans its environment over the complete measuring angle of 360°. Due to the high scanning frequency, this sensor type is suitable for advanced applications. The device meets laser class 1 and is eye safe. Additional precautions to protect the operating personnel are not required. The interactive all-round display integrated in the optical surface can freely display individual texts and graphics. A wide range of accessories enables the sensor to be used in different applications. A PACTware device type manager (DTM) specially developed for this series offers extensive configuration and diagnostic options.

Dimensions

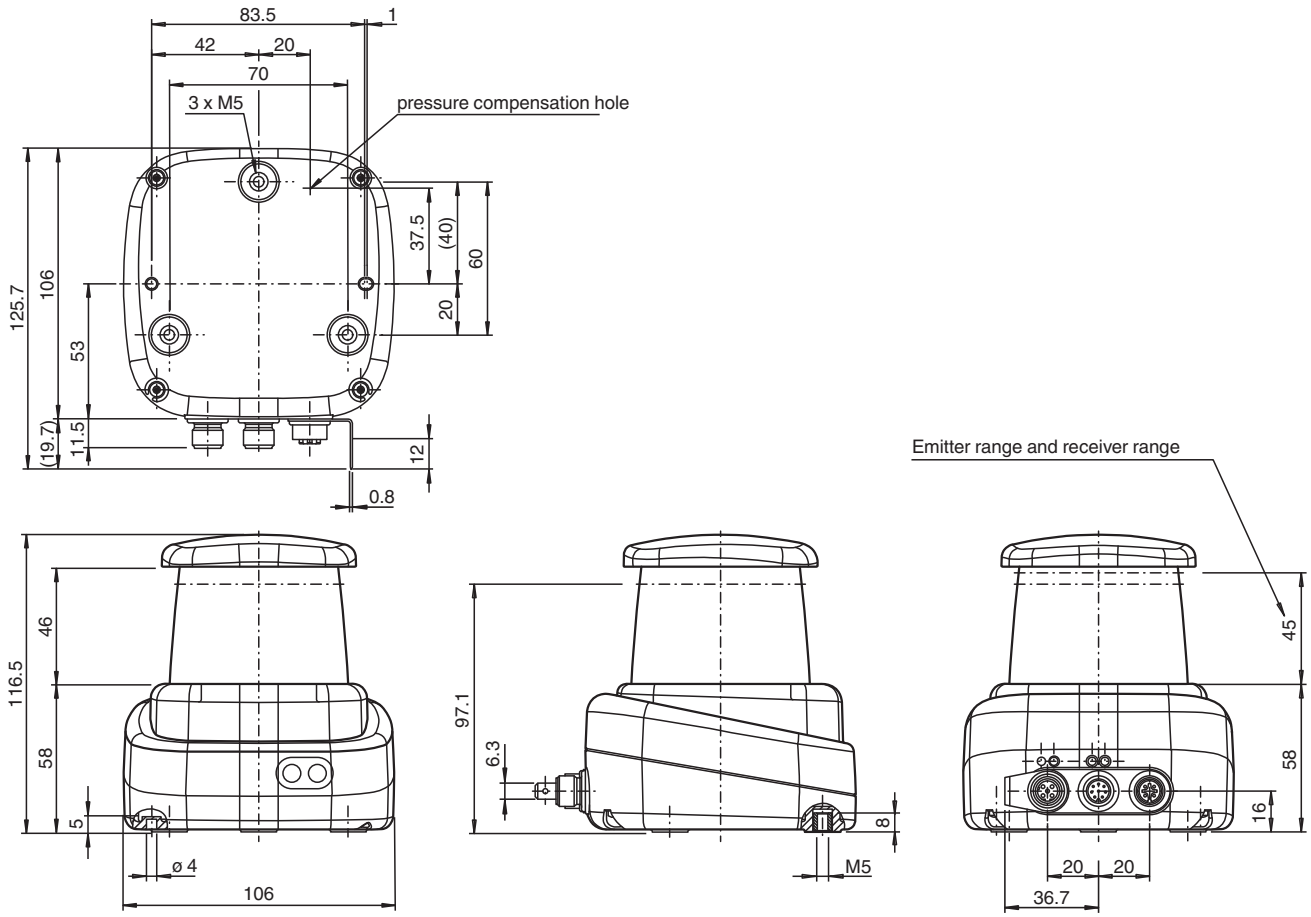

Technical Data

General specifications	
Measurement range	0.2 ... 10 m (bk 10%) 0,2 … 12 m (wh 90 %) 0.3 … 12 m (reflector) Min. reflectivity 2.5%
Light source	laser diode
Light type	modulated infrared light
Laser nominal ratings	
Note	LASER RADIATION , DO NOT STARE INTO BEAM
Laser class	1
Wave length	905 nm
Beam divergence	transversal 2 mrad , longitudinal 10 mrad
Pulse length	5 ns
Repetition rate	84 kHz
max. pulse energy	< 94 nJ
Measuring method	Pulse Ranging Technology (PRT)
Scan rate	10 ... 50 s^{-1}
Scanning angle	360°
Diameter of the light spot	25 mm x 105 mm at 10 m
Ambient light limit	80000 Lux
Resolution	1 mm
Functional safety related parameters	
$MTTF_d$	75 a

Release date: 2023-03-28 Date of issue: 2023-03-28 Filename: 305984_eng.pdf

Technical Data

Mission Time (T_M)		20 a
Diagnostic Coverage (DC)		0 %
Indicators/operating means		
Operation indicator		LED green
Data flow indicator		LED yellow: active ethernet LED green: Ethernet link
Function indicator		LED red: fault LED yellow: Q1 + Q2
Control elements		2 Button
Parameterization indicator		24 x 252 pixels , red
Electrical specifications		
Operating voltage	U_B	10 ... 30 V DC
Ripple		10 % within the supply tolerance
No-load supply current	I_0	≤ 400 mA / 24 V DC
Power consumption	P_0	< 10 W
Time delay before availability	t_v	< 40 s
Interface		
Interface type		Fast Ethernet
Protocol		HTTP , TCP/IP and UDP/IP
Conformity		
Laser safety		EN 60825-1:2014
Compliance with standards and directives		
Standard conformity		
Product standard		IEC 60947-5-2
Shock and impact resistance		EN 60068-2-6 EN 60068-2-27
Measurement accuracy		
Measuring speed		84000 measurements per second
Measured value noise		typ. ± 20 mm (1 sigma)
Angle resolution		0.042 °
Absolute accuracy		typ. ± 40 mm
Repeat accuracy		< 12 mm
Approvals and certificates		
Protection class		III (operating voltage 50 V)
UL approval		cULus Listed, Class 2 Power Source, Type 1 enclosure
CCC approval		CCC approval / marking not required for products rated ≤36 V
Ambient conditions		
Ambient temperature		-10 ... 50 °C (14 ... 122 °F)
Storage temperature		-20 ... 70 °C (-4 ... 158 °F)
Relative humidity		95 % , no moisture condensation
Mechanical specifications		
Housing width		106 mm
Housing height		116.5 mm
Degree of protection		IP65
Connection		4-pin, M12x1 connector, standard (supply) , 8-pin, M12x1 connector, A-coded (MultiPort) , 4-pin, M12x1 socket, D-coded (LAN)
Material		
Housing		ABS + PC + Aluminum
Optical face		PMMA
Mass		approx. 0.8 kg

Release date: 2023-03-28 Date of issue: 2023-03-28 Filename: 305984_eng.pdf

Connection Assignment

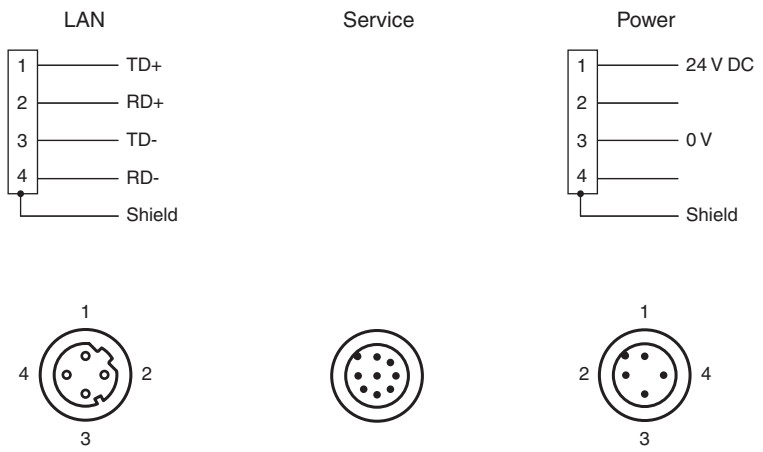

Assembly

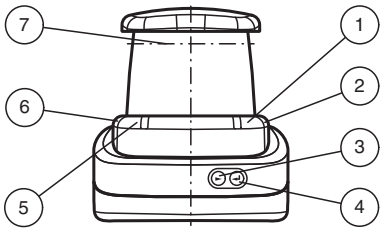

1	Operating status	green
2	Fault indication	red
3	Menu button	
4	Menu button	
5	Q2 signal indicator	yellow
6	Q1 signal indicator	yellow
7	Laser outlet	

Characteristic Curve

Echoamplitude characteristic

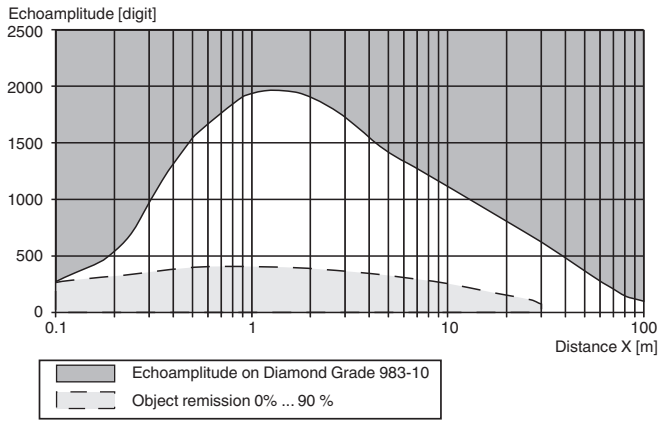

Safety Information

CLASS 1
LASER PRODUCT

IEC 60825-1: 2007 certified.

Complies with 21 CFR 1040.10 and 1040.11 except for deviations pursuant to Laser Notice No. 50, dated June 24, 2007

Release date: 2023-03-28 Date of issue: 2023-03-28 Filename: 305984_eng.pdf

Laser Class 1 Information
Maintenance and repairs should only be carried out by authorized service personnel!
Attach the device so that the warning is clearly visible and readable.
Caution – Use of controls or adjustments or performance of procedures other than those specified herein may result in hazardous radiation exposure.

Accessories

	Schutzkappe LS610 Zubehoer	M12 protective cap set (connector + socket) for series LS610 / LS611
	Funktionserdung LS610/VDM100 Zubehoer	Function grounding for LS610 / LS611 / VDM100 series
	V1SD-G-2M-PUR-ABG-V45-G	Connection cable, M12 to RJ-45, PUR cable 4-pin, CAT5e
	V1SD-G-ABG-PG9	Male connector M12 straight D-coded 4-pin, for cable diameter 5 - 8 mm, shielded, field-attachable
	V1-G-5M-PUR	Female cordset single-ended M12 straight A-coded, 4-pin, PUR cable grey
	V1-G-BK5M-PUR-U	Female cordset single-ended M12 straight A-coded, 4-pin, PUR cable black, UL approved, drag chain suitable, torsion resistant
	MH-R2000	Mounting aid for R2000 series, Quick clamp and adjustment system
	PACTware 4.1	FDT Framework

Release date: 2023-03-28 Date of issue: 2023-03-28 Filename: 305984_eng.pdf

2-D LiDAR Sensor

OMD30M-R2000-B23-V1V1D-1L

- High operating range
- Very high angle resolution
- Infrared light
- Measuring method PRT (Pulse Ranging Technology)
- Flexible measured data filter

R2000 UHD, 2-D LiDAR sensor for precise and highly dynamic positioning, measuring range to object up to 30 m, Ethernet

Function

Based on Pulse Ranging Technology (PRT), the sensor is powerful for measurements with a long range and a small light spot. The device scans its environment over the complete measuring angle of 360°. Due to the high scanning frequency, this sensor type is suitable for advanced applications. The device meets laser class 1 and is eye safe. Additional precautions to protect the operating personnel are not required. The interactive all-round display integrated in the optical surface can freely display individual texts and graphics. A wide range of accessories enables the sensor to be used in different applications. A PACTware device type manager (DTM) specially developed for this series offers extensive configuration and diagnostic options.

Dimensions

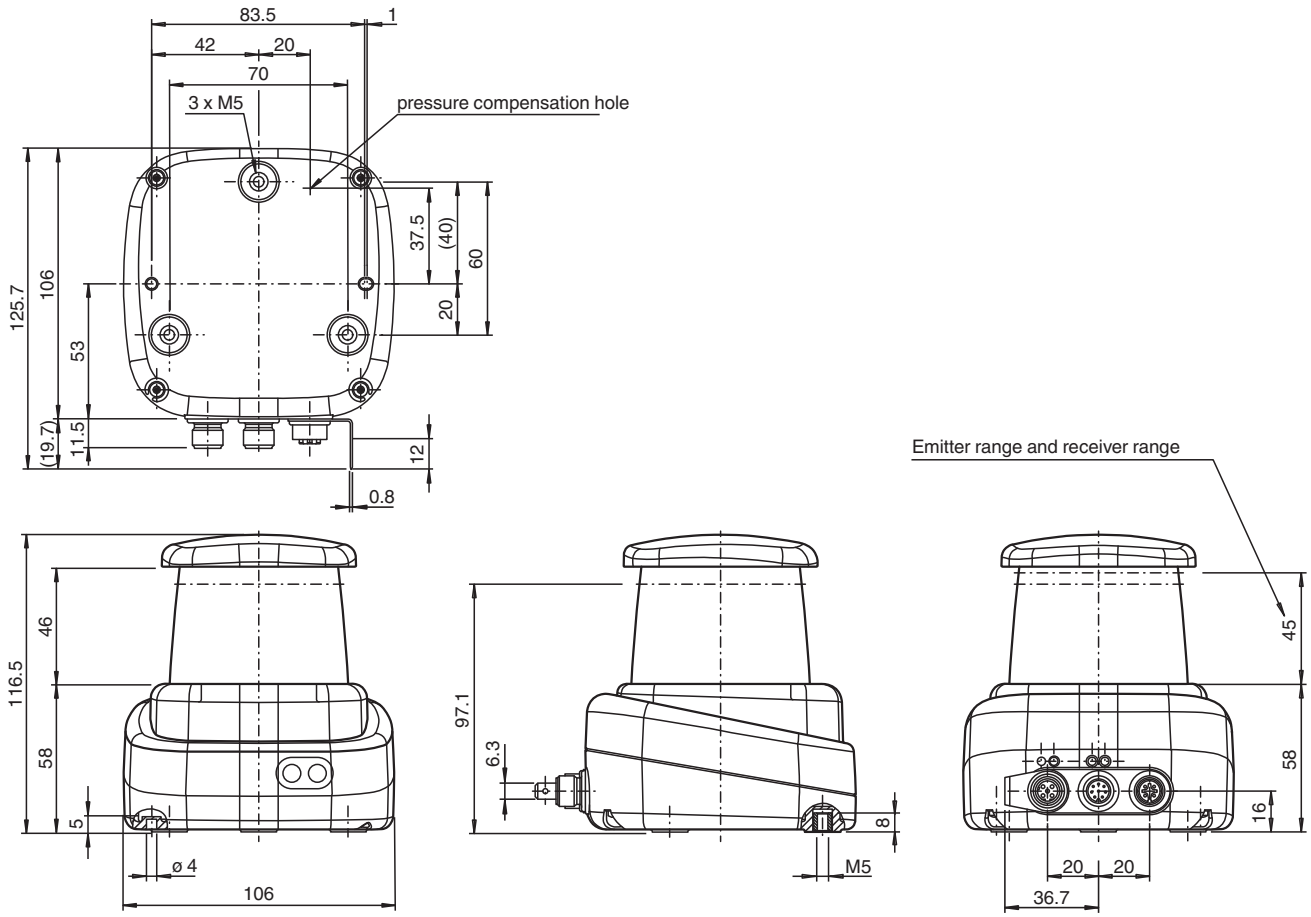

Technical Data

General specifications	
Measurement range	0.1 ... 10 m (bk 10%) 0,1 … 30 m (wh 90 %) 0.1 … 200 m (reflector) Min. reflectivity 2.5%
Light source	laser diode
Light type	modulated infrared light
Laser nominal ratings	
Note	LASER RADIATION , DO NOT STARE INTO BEAM
Laser class	1
Wave length	905 nm
Beam divergence	transversal 2 mrad , longitudinal 10 mrad
Pulse length	5 ns
Repetition rate	250 kHz
max. pulse energy	< 94 nJ
Measuring method	Pulse Ranging Technology (PRT)
Scan rate	10 ... 50 s^{-1}
Scanning angle	360°
Diameter of the light spot	25 mm x 105 mm at 10 m
Filter	Maximum, average, median, reflectivity
Ambient light limit	80000 Lux
Resolution	1 mm
Functional safety related parameters	

Release date: 2024-03-18 Date of issue: 2024-03-18 Filename: 305985_eng.pdf

Technical Data

$MTTF_d$		75 a
Mission Time (T_M)		20 a
Diagnostic Coverage (DC)		0 %
Indicators/operating means		
Operation indicator		LED green
Data flow indicator		LED yellow: active ethernet LED green: Ethernet link
Function indicator		LED red: fault LED yellow: Q1 + Q2
Control elements		2 Button
Parameterization indicator		24 x 252 pixels , red
Electrical specifications		
Operating voltage	U_B	10 ... 30 V DC
Ripple		10 % within the supply tolerance
No-load supply current	I_0	≤ 400 mA / 24 V DC
Power consumption	P_0	< 10 W
Time delay before availability	t_v	< 40 s
Interface		
Interface type		Fast Ethernet, 2 switching outputs
Protocol		HTTP , TCP/IP and UDP/IP
Input/Output		
Input/output type		2 Inputs/Outputs , Independently configurable , short circuit/reverse polarity protected
Output		
Switching threshold		low: Ua < 1 V, high: Ua > Ub - 2 V
Switching current		100 mA per output
Conformity		
Laser safety		EN 60825-1:2014
Compliance with standards and directives		
Standard conformity		
Product standard		IEC 60947-5-2
Shock and impact resistance		EN 60068-2-6 EN 60068-2-27
Measurement accuracy		
Measuring speed		250000 measurements per second
Measured value noise		typ. ± 10 mm (1 sigma; max 20 mm; 0,1 m ... 8 m) typ. ± 12 mm (1 sigma; max 20 mm; 8 m ... 30 m) with measured value filter deactivated
Angle resolution		0.014 °
Absolute accuracy		typ. ± 25 mm
Repeat accuracy		< 12 mm
Approvals and certificates		
Protection class		III (operating voltage 50 V)
UL approval		cULus Listed, Class 2 Power Source, Type 1 enclosure
CCC approval		CCC approval / marking not required for products rated ≤36 V
Ambient conditions		
Ambient temperature		-10 ... 50 °C (14 ... 122 °F)
Storage temperature		-20 ... 70 °C (-4 ... 158 °F)
Relative humidity		95 % , no moisture condensation
Mechanical specifications		
Degree of protection		IP65
Connection		4-pin, M12x1 connector, standard (supply) , 8-pin, M12x1 connector, A-coded (MultiPort) , 4-pin, M12x1 socket, D-coded (LAN)
Material		
Housing		ABS + PC + Aluminum
Optical face		PMMA

Release date: 2024-03-18 Date of issue: 2024-03-18 Filename: 305985_eng.pdf

Technical Data

Mass	approx. 0.8 kg
Dimensions	
Height	116.5 mm
Width	106 mm
Length	106 mm

Connection Assignment

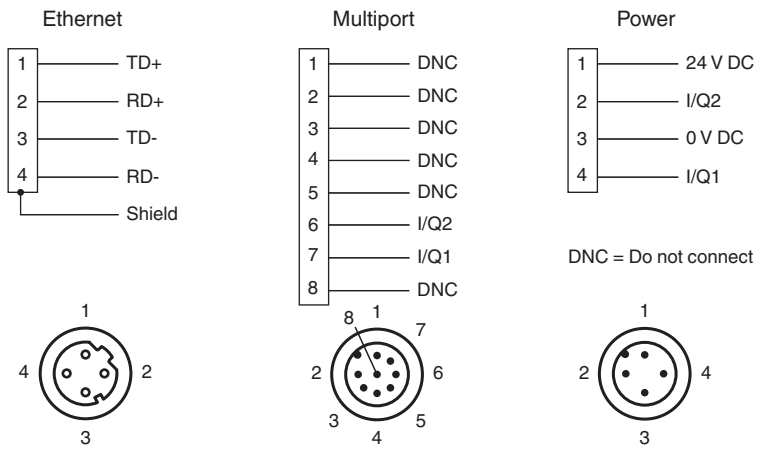

Assembly

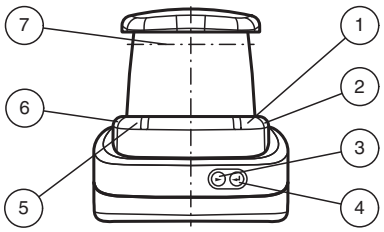

1	Operating status	green
2	Fault indication	red
3	Menu button	
4	Menu button	
5	Q2 signal indicator	yellow
6	Q1 signal indicator	yellow
7	Laser outlet	

Characteristic Curve

Echoamplitude characteristic

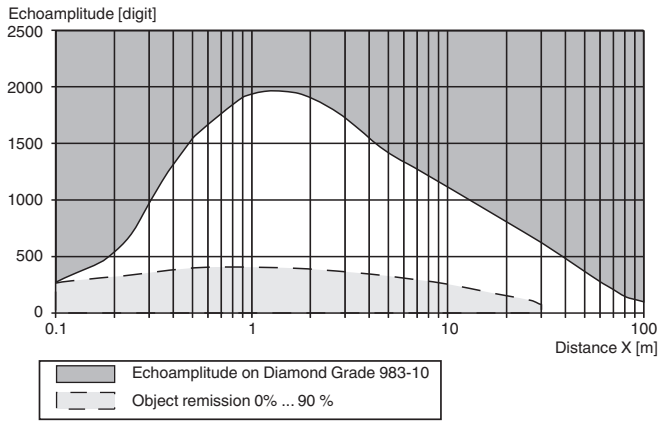

Release date: 2024-03-18 Date of issue: 2024-03-18 Filename: 305985_eng.pdf

Safety Information

Laser Class 1 Information
Maintenance and repairs should only be carried out by authorized service personnel!
Attach the device so that the warning is clearly visible and readable.
Caution – Use of controls or adjustments or performance of procedures other than those specified herein may result in hazardous radiation exposure.

Release date: 2024-03-18 Date of issue: 2024-03-18 Filename: 305985_eng.pdf

2-D LiDAR Sensor

OMD30M-R2000-B23-V1V1D-HD-1L

- High operating range
- High angle resolution
- Infrared light
- Measuring method PRT (Pulse Ranging Technology)
- Flexible measured data filter

R2000 HD, 2-D LiDAR sensor for precise measurement tasks and positioning, measuring range to object up to 30 m, Ethernet

Function

Based on Pulse Ranging Technology (PRT), the sensor is powerful for measurements with a long range and a small light spot. The device scans its environment over the complete measuring angle of 360°. Due to the high scanning frequency, this sensor type is suitable for advanced applications. The device meets laser class 1 and is eye safe. Additional precautions to protect the operating personnel are not required. The interactive all-round display integrated in the optical surface can freely display individual texts and graphics. A wide range of accessories enables the sensor to be used in different applications. A PACTware device type manager (DTM) specially developed for this series offers extensive configuration and diagnostic options.

Dimensions

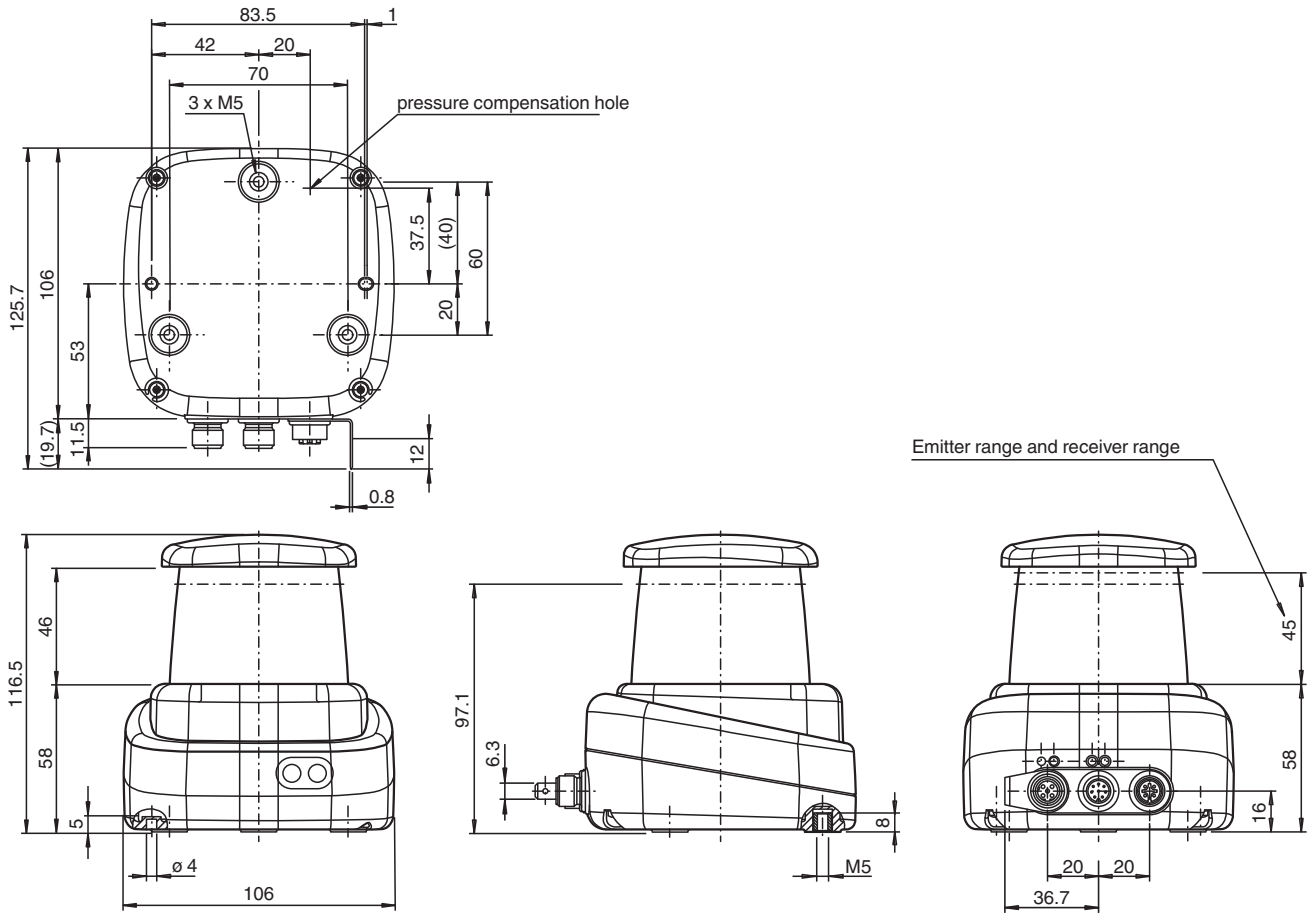

Technical Data

General specifications	
Measurement range	0.1 ... 10 m (bk 10%) 0,1 … 30 m (wh 90 %) 0,1 … 30 m (reflector) Min. reflectivity 2.5%
Light source	laser diode
Light type	modulated infrared light
Laser nominal ratings	
Note	LASER RADIATION , DO NOT STARE INTO BEAM
Laser class	1
Wave length	905 nm
Beam divergence	transversal 2 mrad , longitudinal 10 mrad
Pulse length	5 ns
Repetition rate	84 kHz
max. pulse energy	< 94 nJ
Measuring method	Pulse Ranging Technology (PRT)
Scan rate	10 ... 50 s^{-1}
Scanning angle	360°
Diameter of the light spot	25 mm x 105 mm at 10 m
Filter	Maximum, average, median, reflectivity
Ambient light limit	80000 Lux
Resolution	1 mm
Functional safety related parameters	

Release date: 2023-03-28 Date of issue: 2023-03-28 Filename: 305986_eng.pdf

Technical Data

$MTTF_d$		75 a
Mission Time (T_M)		20 a
Diagnostic Coverage (DC)		0 %
Indicators/operating means		
Operation indicator		LED green
Data flow indicator		LED yellow: active ethernet LED green: Ethernet link
Function indicator		LED red: fault LED yellow: Q1 + Q2
Control elements		2 Button
Parameterization indicator		24 x 252 pixels , red
Electrical specifications		
Operating voltage	U_B	10 ... 30 V DC
Ripple		10 % within the supply tolerance
No-load supply current	I_0	≤ 400 mA / 24 V DC
Power consumption	P_0	< 10 W
Time delay before availability	t_v	< 40 s
Interface		
Interface type		Fast Ethernet, 2 switching outputs
Protocol		HTTP , TCP/IP and UDP/IP
Input/Output		
Input/output type		2 Outputs , Independently configurable , short circuit/reverse polarity protected
Output		
Switching threshold		low: Ua < 1 V, high: Ua > Ub - 2 V
Switching current		100 mA per output
Conformity		
Laser safety		EN 60825-1:2014
Compliance with standards and directives		
Standard conformity		
Product standard		IEC 60947-5-2
Shock and impact resistance		EN 60068-2-6 EN 60068-2-27
Measurement accuracy		
Measuring speed		84000 measurements per second
Measured value noise		typ. ± 10 mm (1 sigma; max 20 mm; 0,1 m ... 8 m) typ. ± 12 mm (1 sigma; max 20 mm; 8 m ... 30 m) with measured value filter deactivated
Angle resolution		0.042 °
Absolute accuracy		typ. ± 25 mm
Repeat accuracy		< 12 mm
Approvals and certificates		
Protection class		III (operating voltage 50 V)
UL approval		cULus Listed, Class 2 Power Source, Type 1 enclosure
CCC approval		CCC approval / marking not required for products rated ≤36 V
Ambient conditions		
Ambient temperature		-10 ... 50 °C (14 ... 122 °F)
Storage temperature		-20 ... 70 °C (-4 ... 158 °F)
Relative humidity		95 % , no moisture condensation
Mechanical specifications		
Housing width		106 mm
Housing height		116.5 mm
Degree of protection		IP65
Connection		4-pin, M12x1 connector, standard (supply) , 8-pin, M12x1 connector, A-coded (MultiPort) , 4-pin, M12x1 socket, D-coded (LAN)
Material		

Release date: 2023-03-28 Date of issue: 2023-03-28 Filename: 305986_eng.pdf

Technical Data

Housing	ABS + PC + Aluminum
Optical face	PMMA
Mass	approx. 0.8 kg

Connection Assignment

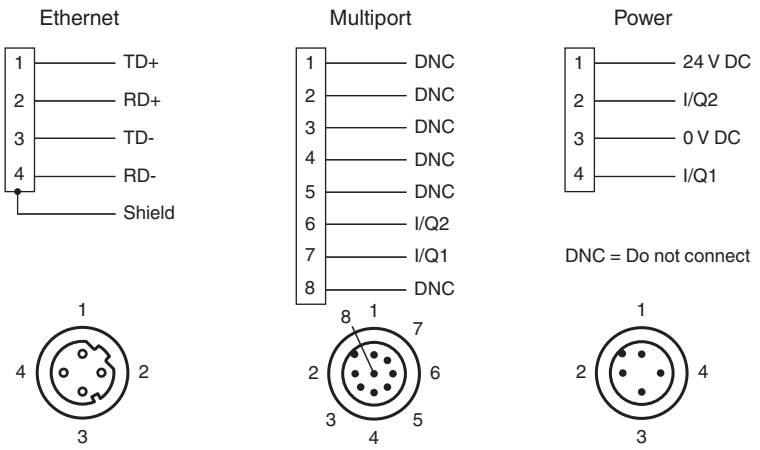

Assembly

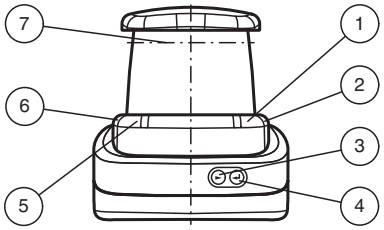

1	Operating status	green
2	Fault indication	red
3	Menu button	
4	Menu button	
5	Q2 signal indicator	yellow
6	Q1 signal indicator	yellow
7	Laser outlet	

Characteristic Curve

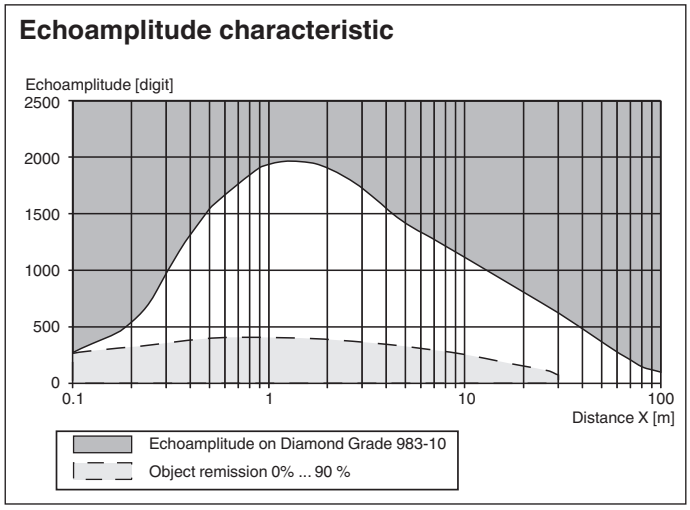

Release date: 2023-03-28 Date of issue: 2023-03-28 Filename: 305986_eng.pdf

Safety Information

CLASS 1
LASER PRODUCT
IEC 60825-1: 2007 certified.
Complies with 21 CFR 1040.10 and 1040.11 except for deviations pursuant to Laser Notice No. 50, dated June 24, 2007

Laser Class 1 Information
Maintenance and repairs should only be carried out by authorized service personnel!
Attach the device so that the warning is clearly visible and readable.
Caution – Use of controls or adjustments or performance of procedures other than those specified herein may result in hazardous radiation exposure.

Matching System Components

	MSEU-F600-Contour2D	Part of the Contour2D Smart System

Accessories

	Schutzkappe LS610 Zubehoer	M12 protective cap set (connector + socket) for series LS610 / LS611
	Funktionserdung LS610/VDM100 Zubehoer	Function grounding for LS610 / LS611 / VDM100 series
	V1SD-G-2M-PUR-ABG-V45-G	Connection cable, M12 to RJ-45, PUR cable 4-pin, CAT5e
	V1SD-G-ABG-PG9	Male connector M12 straight D-coded 4-pin, for cable diameter 5 - 8 mm, shielded, field-attachable
	V1-G-5M-PUR	Female cordset single-ended M12 straight A-coded, 4-pin, PUR cable grey
	V1-G-BK5M-PUR-U	Female cordset single-ended M12 straight A-coded, 4-pin, PUR cable black, UL approved, drag chain suitable, torsion resistant
	MH-R2000	Mounting aid for R2000 series, Quick clamp and adjustment system
PACTware	**PACTware 4.1**	FDT Framework

Release date: 2023-03-28 Date of issue: 2023-03-28 Filename: 305986_eng.pdf

2-D LiDAR Sensor

OMD30M-R2000-B23-V1V1D-T-1L

- High operating range
- Very high angle resolution
- Infrared light
- Deep-freeze applications
- Measuring method PRT (Pulse Ranging Technology)
- Flexible measured data filter

R2000 UHD, 2-D LiDAR sensor for precise and highly dynamic positioning, measuring range to object up to 30 m, Ethernet

Function

Based on Pulse Ranging Technology (PRT), the sensor is powerful for measurements with a long range and a small light spot. The device scans its environment over the complete measuring angle of 360°. Due to the high scanning frequency, this sensor type is suitable for advanced applications. The device meets laser class 1 and is eye safe. Additional precautions to protect the operating personnel are not required. The interactive all-round display integrated in the optical surface can freely display individual texts and graphics. A wide range of accessories enables the sensor to be used in different applications. A PACTware device type manager (DTM) specially developed for this series offers extensive configuration and diagnostic options.

Dimensions

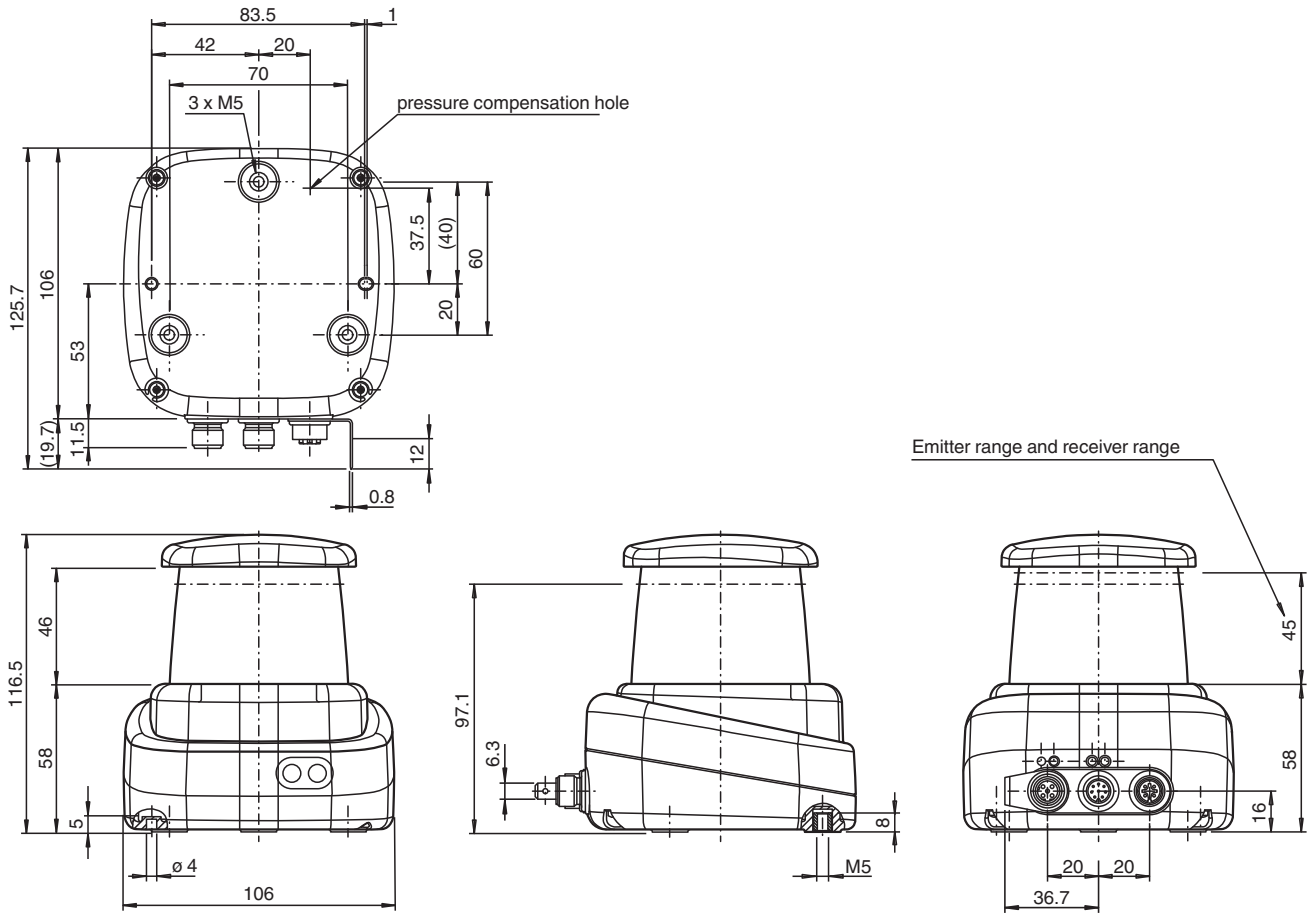

Technical Data

General specifications	
Measurement range	0.1 ... 10 m (bk 10%) 0,1 … 30 m (wh 90 %) 0.1 … 200 m (reflector) Min. reflectivity 2.5%
Light source	laser diode
Light type	modulated infrared light
Laser nominal ratings	
Note	LASER RADIATION , DO NOT STARE INTO BEAM
Laser class	1
Wave length	905 nm
Beam divergence	transversal 2 mrad , longitudinal 10 mrad
Pulse length	5 ns
Repetition rate	250 kHz
max. pulse energy	< 94 nJ
Measuring method	Pulse Ranging Technology (PRT)
Scan rate	10 ... 50 s^{-1}
Scanning angle	360°
Diameter of the light spot	25 mm x 105 mm at 10 m
Filter	Maximum, average, median, reflectivity
Ambient light limit	80000 Lux
Resolution	1 mm
Functional safety related parameters	

Release date: 2024-03-18 Date of issue: 2024-03-18 Filename: 305987_eng.pdf

Technical Data

$MTTF_d$		75 a
Mission Time (T_M)		20 a
Diagnostic Coverage (DC)		0 %
Indicators/operating means		
Operation indicator		LED green
Data flow indicator		LED yellow: active ethernet LED green: Ethernet link
Function indicator		LED red: fault LED yellow: Q1 + Q2
Control elements		2 Button
Parameterization indicator		24 x 252 pixels , red
Electrical specifications		
Operating voltage	U_B	10 ... 30 V DC
Ripple		10 % within the supply tolerance
No-load supply current	I_0	≤ 400 mA / 24 V DC
Power consumption	P_0	< 10 W
Time delay before availability	t_v	< 40 s
Interface		
Interface type		Fast Ethernet, 2 switching outputs
Protocol		HTTP , TCP/IP and UDP/IP
Input/Output		
Input/output type		2 Inputs/Outputs , Independently configurable , short circuit/reverse polarity protected
Output		
Switching threshold		low: Ua < 1 V, high: Ua > Ub - 2 V
Switching current		100 mA per output
Conformity		
Laser safety		EN 60825-1:2014
Compliance with standards and directives		
Standard conformity		
Product standard		IEC 60947-5-2
Shock and impact resistance		EN 60068-2-6 EN 60068-2-27
Measurement accuracy		
Measuring speed		250000 measurements per second
Measured value noise		typ. ± 10 mm (1 sigma; max 20 mm; 0,1 m ... 8 m) typ. ± 12 mm (1 sigma; max 20 mm; 8 m ... 30 m) with measured value filter deactivated
Angle resolution		0.014 °
Absolute accuracy		typ. ± 25 mm
Repeat accuracy		< 12 mm
Approvals and certificates		
Protection class		III (operating voltage 50 V)
UL approval		cULus Listed, Class 2 Power Source, Type 1 enclosure
CCC approval		CCC approval / marking not required for products rated ≤36 V
Ambient conditions		
Ambient temperature		-30 ... 50 °C (-22 ... 122 °F)
Storage temperature		-40 ... 70 °C (-40 ... 158 °F)
Relative humidity		95 % , no moisture condensation
Mechanical specifications		
Degree of protection		IP67
Connection		4-pin, M12x1 connector, standard (supply) , 8-pin, M12x1 connector, A-coded (MultiPort) , 4-pin, M12x1 socket, D-coded (LAN)
Material		
Housing		ABS + PC + Aluminum
Optical face		PMMA

Release date: 2024-03-18 Date of issue: 2024-03-18 Filename: 305987_eng.pdf

Technical Data

Mass	approx. 0.8 kg
Dimensions	
Height	116.5 mm
Width	106 mm
Length	106 mm

Connection Assignment

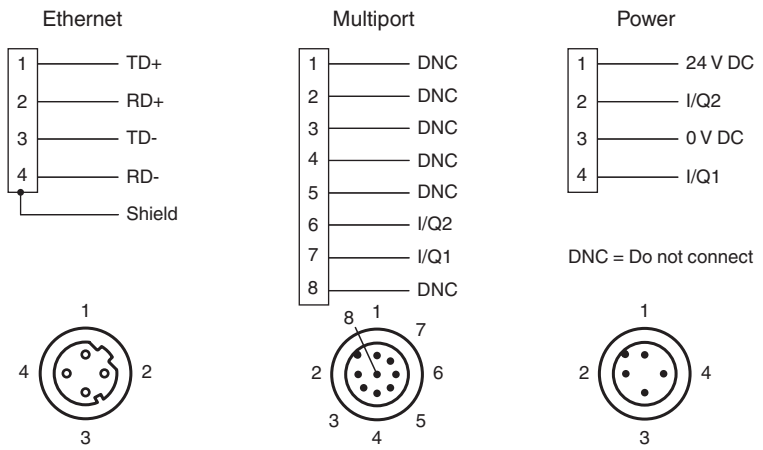

Assembly

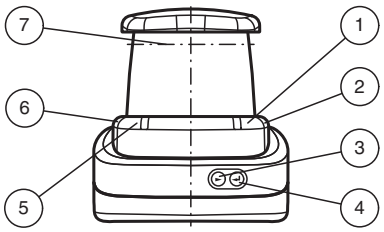

1	Operating status	green
2	Fault indication	red
3	Menu button	
4	Menu button	
5	Q2 signal indicator	yellow
6	Q1 signal indicator	yellow
7	Laser outlet	

Characteristic Curve

Echoamplitude characteristic

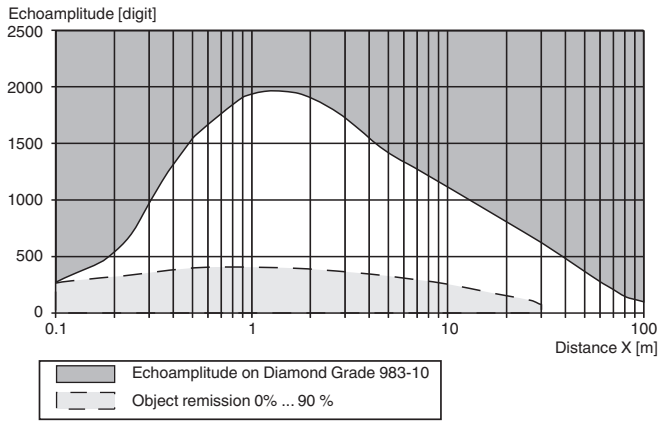

Release date: 2024-03-18 Date of issue: 2024-03-18 Filename: 305987_eng.pdf

2-D LiDAR Sensor

OMD60M-R2000-B23-V1V1D-1L

- High operating range
- Very high angle resolution
- Infrared light
- Measuring method PRT (Pulse Ranging Technology)
- Flexible measured data filter

R2000 UHD, 2-D LiDAR sensor for precise and highly dynamic positioning, measuring range to object up to 60 m, Ethernet

Function

Based on Pulse Ranging Technology (PRT), the sensor is powerful for measurements with a long range and a small light spot. The device scans its environment over the complete measuring angle of 360°. Due to the high scanning frequency, this sensor type is suitable for advanced applications. The device meets laser class 1 and is eye safe. Additional precautions to protect the operating personnel are not required. The interactive all-round display integrated in the optical surface can freely display individual texts and graphics. A wide range of accessories enables the sensor to be used in different applications. A PACTware device type manager (DTM) specially developed for this series offers extensive configuration and diagnostic options.

Dimensions

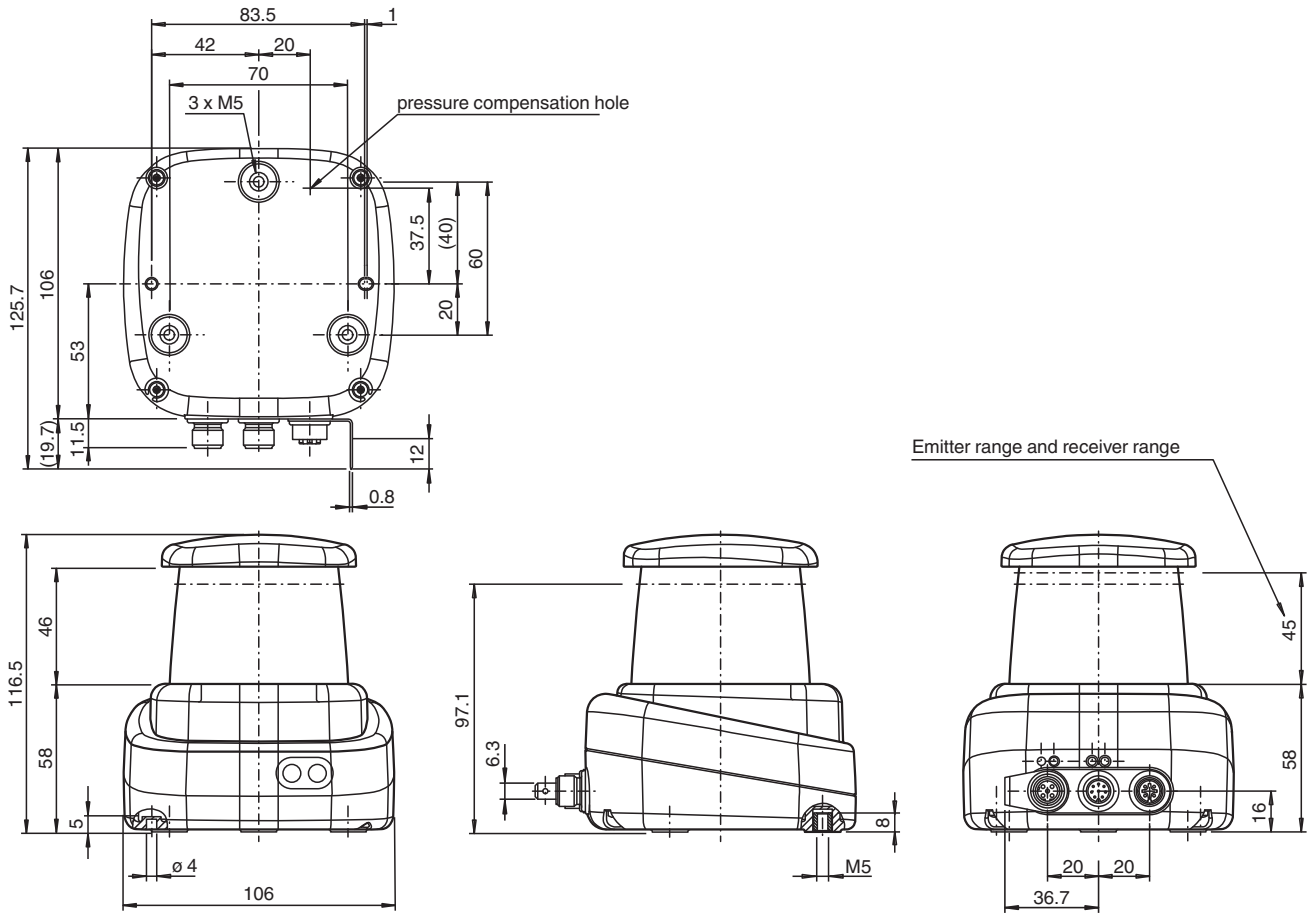

Technical Data

General specifications	
Measurement range	0.1 … 20 m (bw 10 %) 0.1 … 60 m (wb 90 %) 0.1 … 200 m (reflector) Min. reflectivity 1.8 %
Light source	laser diode
Light type	modulated infrared light
Laser nominal ratings	
Note	LASER RADIATION , DO NOT STARE INTO BEAM
Laser class	1
Wave length	905 nm
Beam divergence	transversal 2 mrad , longitudinal 10 mrad
Pulse length	5 ns
Repetition rate	250 kHz
max. pulse energy	< 94 nJ
Measuring method	Pulse Ranging Technology (PRT)
Scan rate	10 ... 50 s^{-1}
Scanning angle	360°
Diameter of the light spot	25 mm x 105 mm at 10 m
Filter	Maximum, average, median, reflectivity
Ambient light limit	50000 Lux
Resolution	1 mm
Functional safety related parameters	

Release date: 2024-03-18 Date of issue: 2024-03-18 Filename: 317220_eng.pdf

Technical Data

$MTTF_d$		75 a
Mission Time (T_M)		20 a
Diagnostic Coverage (DC)		0 %
Indicators/operating means		
Operation indicator		LED green
Data flow indicator		LED yellow: active ethernet LED green: Ethernet link
Function indicator		LED red: fault LED yellow: Q1 + Q2
Control elements		2 Button
Parameterization indicator		24 x 252 pixels , red
Electrical specifications		
Operating voltage	U_B	10 ... 30 V
Ripple		10 % within the supply tolerance
No-load supply current	I_0	≤ 400 mA / 24 V DC
Power consumption	P_0	< 10 W
Time delay before availability	t_v	< 40 s
Interface		
Interface type		Fast Ethernet, 2 switching outputs
Protocol		HTTP , TCP/IP and UDP/IP
Input/Output		
Input/output type		2 Inputs/Outputs , Independently configurable , short circuit/reverse polarity protected
Output		
Switching threshold		low: Ua < 1 V, high: Ua > Ub - 2 V
Switching current		100 mA per output
Conformity		
Laser safety		EN 60825-1:2014
Compliance with standards and directives		
Standard conformity		
Product standard		IEC 60947-5-2
Shock and impact resistance		EN 60068-2-6 EN 60068-2-27
Measurement accuracy		
Measuring speed		250000 measurements per second
Measured value noise		typ. ± 12 mm (1 Sigma; max. 20 mm) with measured value filter deactivated
Angle resolution		0.014 °
Absolute accuracy		< 0.5 m: typ. ± 40 mm > 0.5 m: typ. ± 30 mm Reflector: typ. ± 40 mm
Repeat accuracy		< 12 mm
Approvals and certificates		
Protection class		III (operating voltage 50 V)
UL approval		cULus Listed, Class 2 Power Source, Type 1 enclosure
CCC approval		CCC approval / marking not required for products rated ≤36 V
Ambient conditions		
Ambient temperature		-10 ... 50 °C (14 ... 122 °F)
Storage temperature		-20 ... 70 °C (-4 ... 158 °F)
Relative humidity		95 % , no moisture condensation
Mechanical specifications		
Degree of protection		IP65
Connection		4-pin, M12x1 connector, standard (supply) , 8-pin, M12x1 connector, A-coded (MultiPort) , 4-pin, M12x1 socket, D-coded (LAN)
Material		

Release date: 2024-03-18 Date of issue: 2024-03-18 Filename: 317220_eng.pdf

Technical Data

Housing	ABS + PC + Aluminum
Optical face	PMMA
Mass	approx. 0.8 kg
Dimensions	
Height	116.5 mm
Width	106 mm
Length	106 mm

Connection Assignment

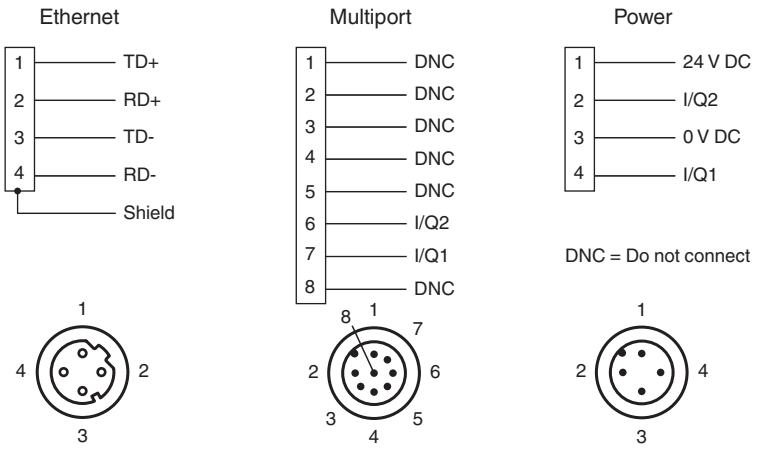

Assembly

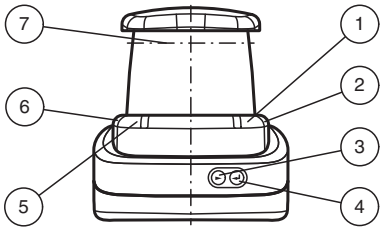

1	Operating status	green
2	Fault indication	red
3	Menu button	
4	Menu button	
5	Q2 signal indicator	yellow
6	Q1 signal indicator	yellow
7	Laser outlet	

Characteristic Curve

Echoamplitude characteristic

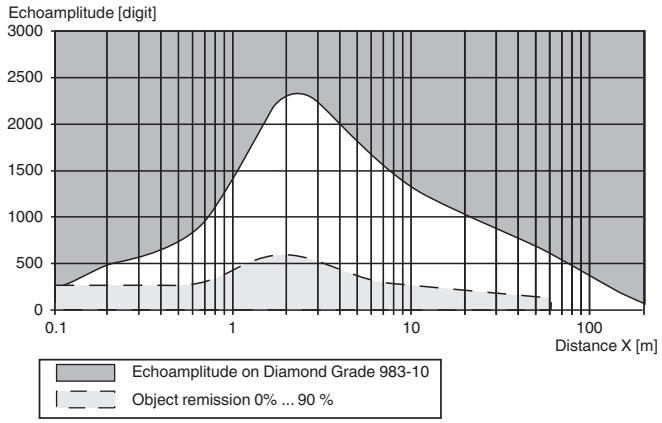

Release date: 2024-03-18 Date of issue: 2024-03-18 Filename: 317220_eng.pdf

2-D LiDAR Sensor

OMD60M-R2000-B23-V1V1D-T-1L

- High operating range
- Very high angle resolution
- Infrared light
- Deep-freeze applications
- Measuring method PRT (Pulse Ranging Technology)
- Flexible measured data filter

R2000 UHD, 2-D LiDAR sensor for precise and highly dynamic positioning, measuring range to object up to 60 m, Ethernet

Function

Based on Pulse Ranging Technology (PRT), the sensor is powerful for measurements with a long range and a small light spot. The device scans its environment over the complete measuring angle of 360°. Due to the high scanning frequency, this sensor type is suitable for advanced applications. The device meets laser class 1 and is eye safe. Additional precautions to protect the operating personnel are not required. The interactive all-round display integrated in the optical surface can freely display individual texts and graphics. A wide range of accessories enables the sensor to be used in different applications. A PACTware device type manager (DTM) specially developed for this series offers extensive configuration and diagnostic options.

Dimensions

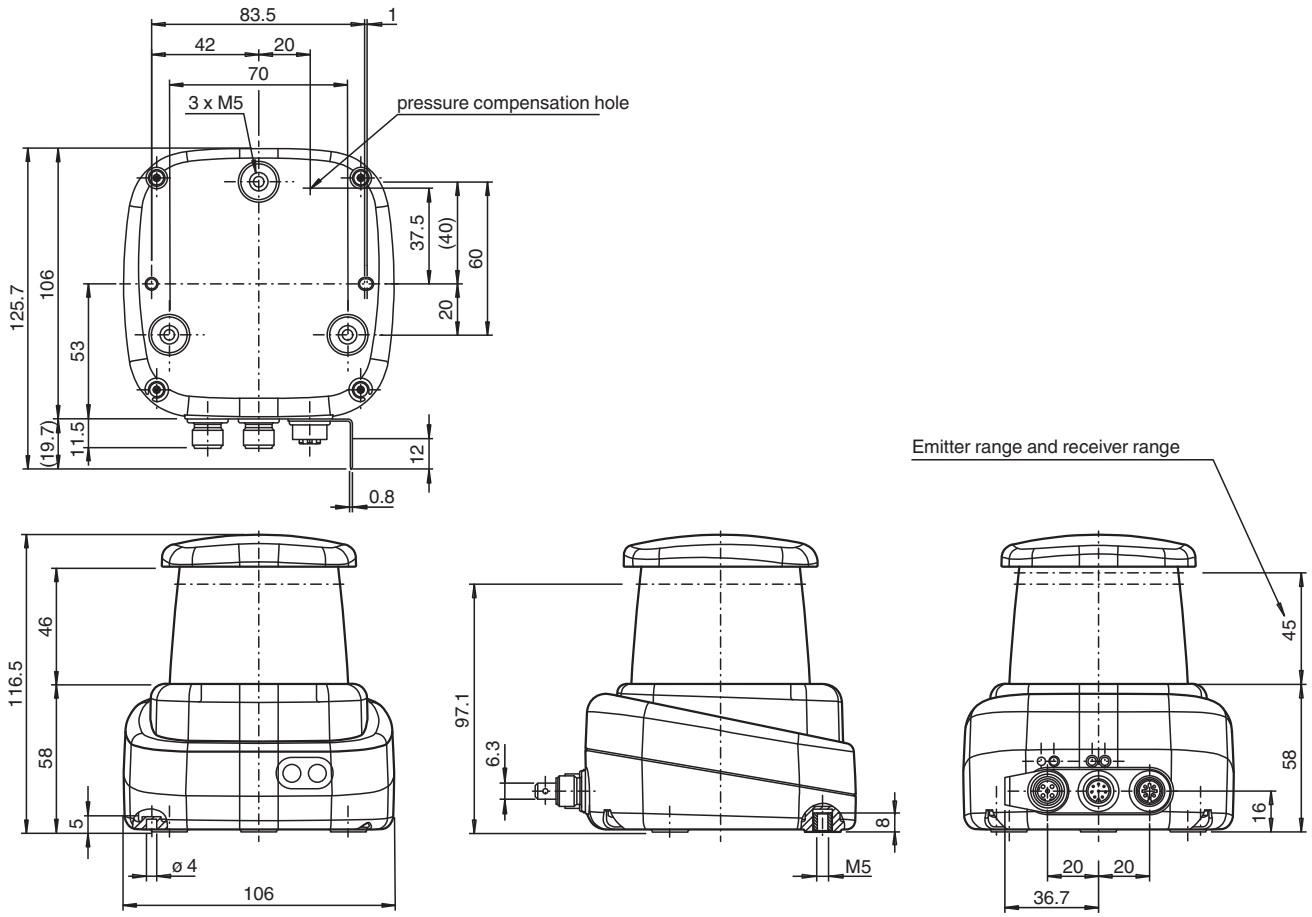

Technical Data

General specifications	
Measurement range	0.1 … 20 m (bw 10 %) 0.1 … 60 m (wb 90 %) 0.1 … 200 m (reflector) Min. reflectivity 1.8 %
Light source	laser diode
Light type	modulated infrared light
Laser nominal ratings	
Note	LASER RADIATION , DO NOT STARE INTO BEAM
Laser class	1
Wave length	905 nm
Beam divergence	transversal 2 mrad , longitudinal 10 mrad
Pulse length	5 ns
Repetition rate	250 kHz
max. pulse energy	< 94 nJ
Measuring method	Pulse Ranging Technology (PRT)
Scan rate	10 ... 50 s^{-1}
Scanning angle	360°
Diameter of the light spot	25 mm x 105 mm at 10 m
Filter	Maximum, average, median, reflectivity
Ambient light limit	50000 Lux
Resolution	1 mm
Functional safety related parameters	

Release date: 2024-03-18 Date of issue: 2024-03-18 Filename: 317294_eng.pdf

Technical Data

$MTTF_d$		75 a
Mission Time (T_M)		20 a
Diagnostic Coverage (DC)		0 %
Indicators/operating means		
Operation indicator		LED green
Data flow indicator		LED yellow: active ethernet LED green: Ethernet link
Function indicator		LED red: fault LED yellow: Q1 + Q2
Control elements		2 Button
Parameterization indicator		24 x 252 pixels , red
Electrical specifications		
Operating voltage	U_B	10 ... 30 V
Ripple		10 % within the supply tolerance
No-load supply current	I_0	≤ 400 mA / 24 V DC
Power consumption	P_0	< 10 W
Time delay before availability	t_v	< 40 s
Interface		
Interface type		Fast Ethernet, 2 switching outputs
Protocol		HTTP , TCP/IP and UDP/IP
Input/Output		
Input/output type		2 Inputs/Outputs , Independently configurable , short circuit/reverse polarity protected
Output		
Switching threshold		low: Ua < 1 V, high: Ua > Ub - 2 V
Switching current		100 mA per output
Conformity		
Laser safety		EN 60825-1:2014
Compliance with standards and directives		
Standard conformity		
Product standard		IEC 60947-5-2
Shock and impact resistance		EN 60068-2-6 EN 60068-2-27
Measurement accuracy		
Measuring speed		250000 measurements per second
Measured value noise		typ. ± 12 mm (1 Sigma; max. 20 mm) with measured value filter deactivated
Angle resolution		0.014 °
Absolute accuracy		< 0.5 m: typ. ± 40 mm > 0.5 m: typ. ± 30 mm Reflector: typ. ± 40 mm
Repeat accuracy		< 12 mm
Approvals and certificates		
Protection class		III (operating voltage 50 V)
UL approval		cULus Listed, Class 2 Power Source, Type 1 enclosure
CCC approval		CCC approval / marking not required for products rated ≤36 V
Ambient conditions		
Ambient temperature		-30 ... 50 °C (-22 ... 122 °F)
Storage temperature		-40 ... 70 °C (-40 ... 158 °F)
Relative humidity		95 % , no moisture condensation
Mechanical specifications		
Degree of protection		IP67
Connection		4-pin, M12x1 connector, standard (supply) , 8-pin, M12x1 connector, A-coded (MultiPort) , 4-pin, M12x1 socket, D-coded (LAN)
Material		

Release date: 2024-03-18 Date of issue: 2024-03-18 Filename: 317294_eng.pdf

Technical Data

Housing	ABS + PC + Aluminum
Optical face	PMMA
Mass	approx. 0.8 kg
Dimensions	
Height	116.5 mm
Width	106 mm
Length	106 mm

Connection Assignment

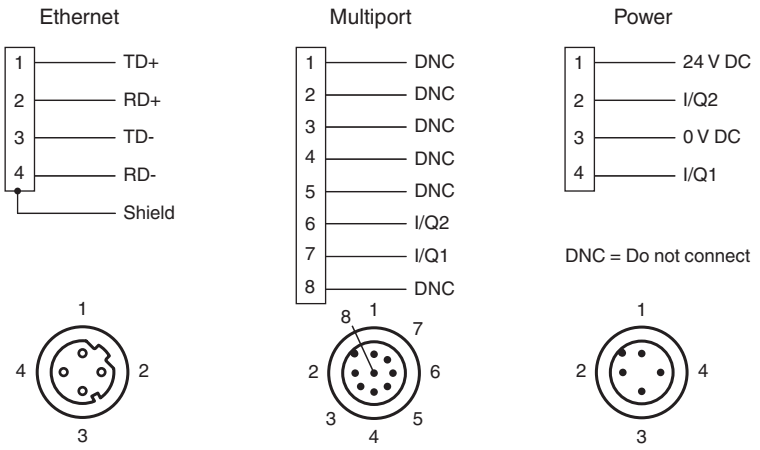

Assembly

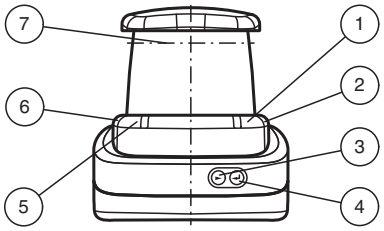

1	Operating status	green
2	Fault indication	red
3	Menu button	
4	Menu button	
5	Q2 signal indicator	yellow
6	Q1 signal indicator	yellow
7	Laser outlet	

Characteristic Curve

Echoamplitude characteristic

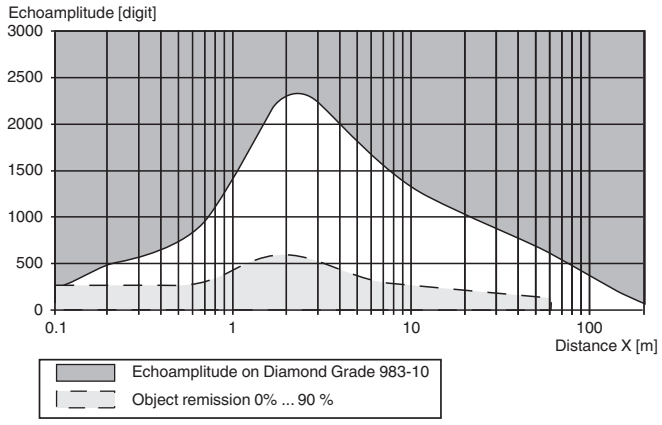

Release date: 2024-03-18 Date of issue: 2024-03-18 Filename: 317294_eng.pdf

2-D LiDAR Sensor

OBD10M-R2000-4EP-V1V17

- 4 freely programmable monitoring fields
- 4 inputs/outputs (selectable)
- High angle resolution
- 360°-angle of measurement
- Measuring method PRT (Pulse Ranging Technology)

R2000 Detection, 2-D LiDAR sensor for precise field monitoring, measuring range to object up to 10 m

Function

Based on Pulse Ranging Technology (PRT), the sensor is powerful for measurements with a long range and a small light spot. The device scans its environment over the complete measuring angle of 360°. Due to the high scanning frequency, this sensor type is suitable for advanced applications. The device meets laser class 1 and is eye safe. Additional precautions to protect the operating personnel are not required. The interactive all-round display integrated in the optical surface can freely display individual texts and graphics. A wide range of accessories enables the sensor to be used in different applications. A PACTware device type manager (DTM) specially developed for this series offers extensive configuration and diagnostic options.

Dimensions

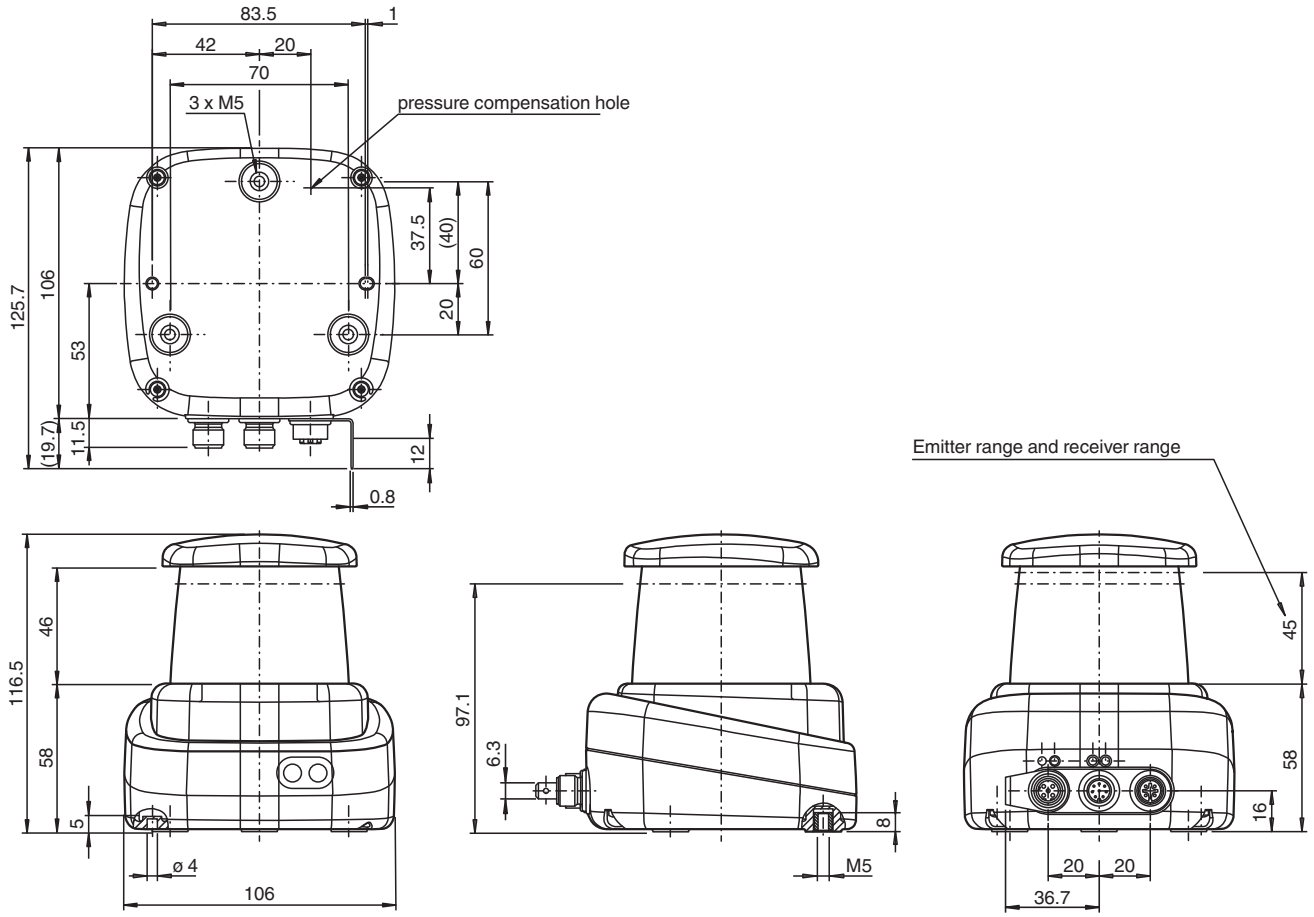

Release date: 2024-09-17 Date of issue: 2024-09-17 Filename: 70112342_eng.pdf

Technical Data

General specifications		
Measurement range		0.2 ... 3 m (bk 10%) 0.2 to 10 m (wh 90%) 0.2 to 30 m (reflector)
Light source		laser diode
Light type		modulated visible red light
Laser nominal ratings		
Note		LASER LIGHT , DO NOT STARE INTO BEAM
Laser class		1
Wave length		660 nm
Beam divergence		1 mrad
Pulse length		5 ns
Repetition rate		54 kHz
max. pulse energy		< 4 nJ
Measuring method		Pulse Ranging Technology (PRT)
Scan rate		10 Hz, 20 Hz, 30 Hz
Scanning angle		360°
Diameter of the light spot		< 20 mm at 10 m
Ambient light limit		80000 Lux
Functional safety related parameters		
$MTTF_d$		75 a
Mission Time (T_M)		20 a
Diagnostic Coverage (DC)		0 %
Indicators/operating means		
Operation indicator		LED green
Data flow indicator		LED yellow: active ethernet LED green: Ethernet link
Function indicator		LED red: fault Yellow LED: I/Q1 + I/Q2
Control elements		2 Button
Parameterization indicator		24 x 252 pixels , red
Electrical specifications		
Operating voltage	U_B	10 ... 30 V DC
Ripple		10 % within the supply tolerance
No-load supply current	I_0	≤ 400 mA / 24 V DC
Power consumption	P_0	< 10 W
Time delay before availability	t_v	< 40 s
Integrated application		
Application		Field monitoring
Number of fields		4
Response time		30 ms + 1 Scan duration
Detectable object shape		Almost any
Object size		> 1 mm
Linking fields		Up to 4 x 3 levels
Interface		
Interface type		4 x switching inputs/outputs (selectable)
Input/Output		
Input/output type		4 Inputs/Outputs , Independently configurable , short circuit/reverse polarity protected
Input		
Switching threshold		low: Ue < 5 V, high: Ue > 10 V
Output		
Switching threshold		low: Ua < 1 V, high: Ua > Ub - 2 V
Switching current		100 mA per output

Release date: 2024-09-17 Date of issue: 2024-09-17 Filename: 70112342_eng.pdf

Technical Data

Conformity	
Laser safety	EN 60825-1:2014
Compliance with standards and directives	
Standard conformity	
Product standard	IEC 61000-6-2
Shock and impact resistance	EN 60068-2-6 EN 60068-2-27
Measurement accuracy	
Measuring speed	54000 measurements per second
Angle resolution	0,071°; 0,15°; 0,2°
Repeat accuracy	< 12 mm
Approvals and certificates	
Protection class	III (operating voltage 50 V)
UL approval	cULus Listed, Class 2 Power Source, Type 1 enclosure
CCC approval	CCC approval / marking not required for products rated ≤36 V
Ambient conditions	
Ambient temperature	-10 ... 50 °C (14 ... 122 °F)
Storage temperature	-20 ... 70 °C (-4 ... 158 °F)
Relative humidity	95 % , no moisture condensation
Mechanical specifications	
Degree of protection	IP65
Connection	4-pin, M12x1 connector, A-coded (supply) , 8-pin, M12x1 connector, A-coded (MultiPort) , 4-pin, M12x1 socket, D-coded (LAN)
Material	
Housing	ABS + PC + Aluminum
Optical face	PMMA
Mass	approx. 0.8 kg
Dimensions	
Height	116.5 mm
Width	106 mm
Length	106 mm

Connection Assignment

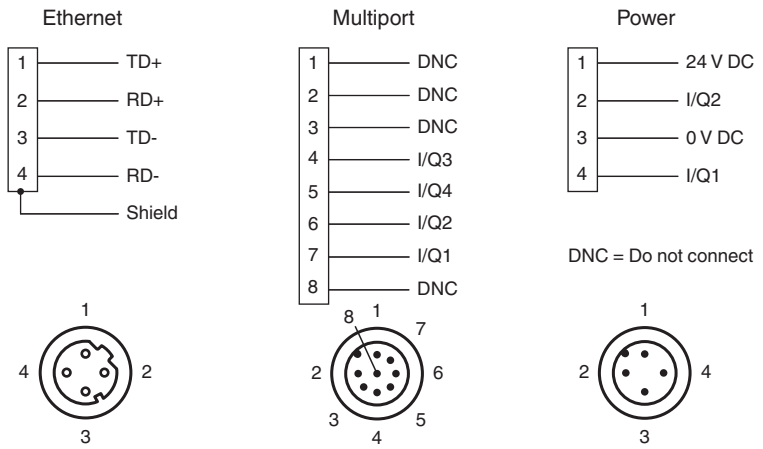

Release date: 2024-09-17 Date of issue: 2024-09-17 Filename: 70112342_eng.pdf

Assembly

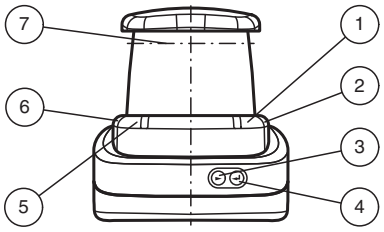

1	Operating status	green
2	Fault indication	red
3	Menu button	
4	Menu button	
5	Q2 signal indicator	yellow
6	Q1 signal indicator	yellow
7	Laser outlet	

Safety Information

Safety Information

Laser Class 1 Information

- The irradiation can lead to irritation especially in a dark environment. Do not point at people!
- Maintenance and repairs should only be carried out by authorized service personnel!
- Caution – Use of controls or adjustments or performance of procedures other than those specified herein may result in hazardous radiation exposure.

Release date: 2024-09-17 Date of issue: 2024-09-17 Filename: 70112342_eng.pdf

2-D LiDAR Sensor

OBD30M-R2000-1L-Y70112344

- 4 freely programmable monitoring fields
- 4 inputs/outputs (selectable)
- High operating range
- 360°-angle of measurement
- Measuring method PRT (Pulse Ranging Technology)
- Very narrow scan plane

R2000 Detection, 2-D LiDAR sensor for precise field monitoring, measuring range to object up to 30 m

Function

Based on Pulse Ranging Technology (PRT), the sensor is powerful for measurements with a long range and a small light spot. The device scans its environment over the complete measuring angle of 360°. Due to the high scanning frequency, this sensor type is suitable for advanced applications. The device meets laser class 1 and is eye safe. Additional precautions to protect the operating personnel are not required. The interactive all-round display integrated in the optical surface can freely display individual texts and graphics. A wide range of accessories enables the sensor to be used in different applications. A PACTware device type manager (DTM) specially developed for this series offers extensive configuration and diagnostic options.

Dimensions

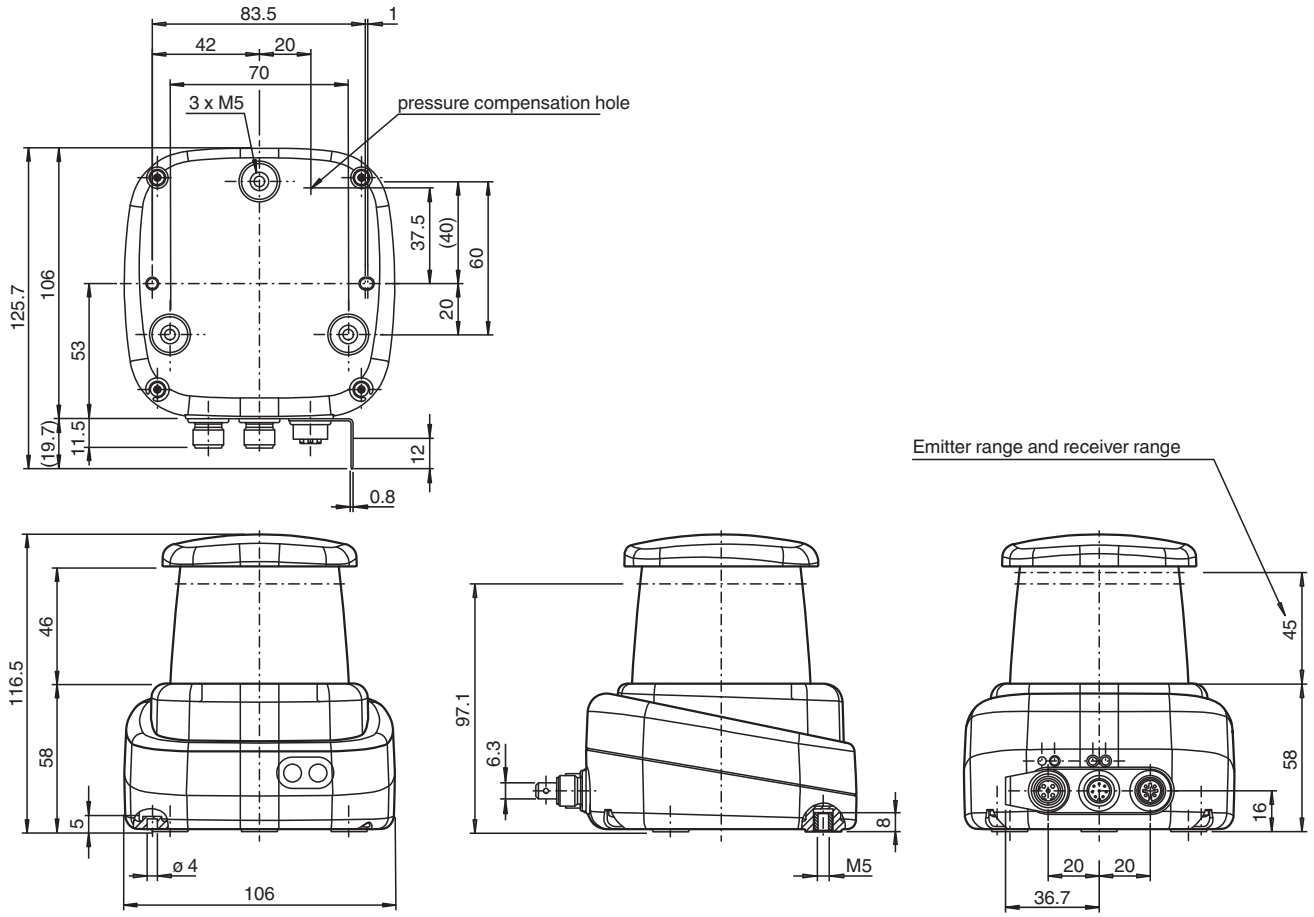

Technical Data

General specifications		
Measurement range		0.1 ... 10 m (bk 10%) 0,1 … 30 m (wh 90 %) 0,1 … 30 m (reflector) Min. reflectivity 2.5%
Light source		laser diode
Light type		modulated infrared light
Laser nominal ratings		
Note		LASER RADIATION , DO NOT STARE INTO BEAM
Laser class		1
Wave length		905 nm
Beam divergence		transversal 10 mrad , longitudinal 2 mrad
Pulse length		5 ns
Repetition rate		54 kHz
max. pulse energy		< 94 nJ
Measuring method		Pulse Ranging Technology (PRT)
Scan rate		10 Hz, 20 Hz, 30 Hz
Scanning angle		360°
Diameter of the light spot		105 mm x 25 mm at 10 m
Ambient light limit		80000 Lux
Functional safety related parameters		
$MTTF_d$		75 a
Mission Time (T_M)		20 a
Diagnostic Coverage (DC)		0 %
Indicators/operating means		
Operation indicator		LED green
Data flow indicator		LED yellow: active ethernet LED green: Ethernet link
Function indicator		LED red: fault Yellow LED: I/Q1 + I/Q2
Control elements		2 Button
Parameterization indicator		24 x 252 pixels , red
Electrical specifications		
Operating voltage	U_B	10 ... 30 V DC
Ripple		10 % within the supply tolerance
No-load supply current	I_0	≤ 400 mA / 24 V DC
Power consumption	P_0	< 10 W
Time delay before availability	t_v	< 40 s
Integrated application		
Application		Field monitoring
Number of fields		4
Response time		30 ms + 1 Scan duration
Detectable object shape		Almost any
Object size		> 1 mm
Linking fields		Up to 4 x 3 levels
Interface		
Interface type		4 x switching inputs/outputs (selectable)
Input/Output		
Input/output type		4 Inputs/Outputs , Independently configurable , short circuit/reverse polarity protected
Input		
Switching threshold		low: Ue < 5 V, high: Ue > 10 V
Output		
Switching threshold		low: Ua < 1 V, high: Ua > Ub - 2 V
Switching current		100 mA per output

Release date: 2024-09-17 Date of issue: 2024-09-17 Filename: 70112344_eng.pdf

Technical Data

Conformity	
Laser safety	EN 60825-1:2014
Compliance with standards and directives	
Standard conformity	
Product standard	IEC 61000-6-2
Shock and impact resistance	EN 60068-2-6 EN 60068-2-27
Measurement accuracy	
Measuring speed	54000 measurements per second
Angle resolution	0,071°; 0,15°; 0,2°
Repeat accuracy	< 12 mm
Approvals and certificates	
Protection class	III (operating voltage 50 V)
UL approval	cULus Listed, Class 2 Power Source, Type 1 enclosure
CCC approval	CCC approval / marking not required for products rated ≤36 V
Ambient conditions	
Ambient temperature	-10 ... 50 °C (14 ... 122 °F)
Storage temperature	-20 ... 70 °C (-4 ... 158 °F)
Relative humidity	95 % , no moisture condensation
Mechanical specifications	
Degree of protection	IP65
Connection	4-pin, M12x1 connector, standard (supply) , 8-pin, M12x1 connector, A-coded (MultiPort) , 4-pin, M12x1 socket, D-coded (LAN)
Material	
Housing	ABS + PC + Aluminum
Optical face	PMMA
Mass	approx. 0.8 kg
Dimensions	
Height	116.5 mm
Width	106 mm
Length	106 mm

Connection Assignment

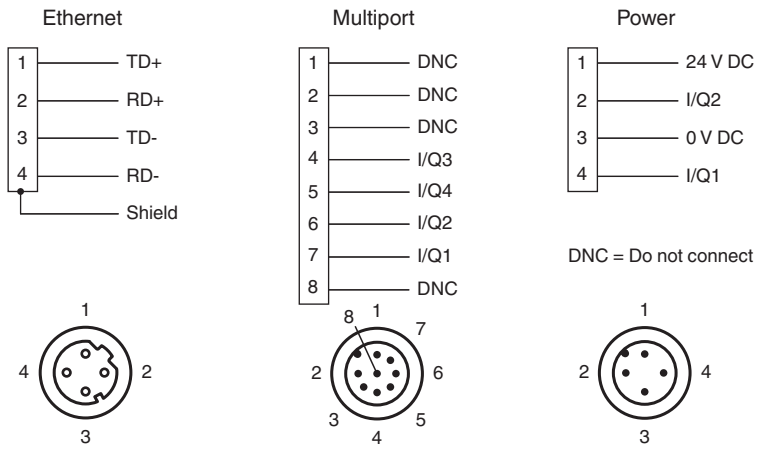

Release date: 2024-09-17 Date of issue: 2024-09-17 Filename: 70112344_eng.pdf

Assembly

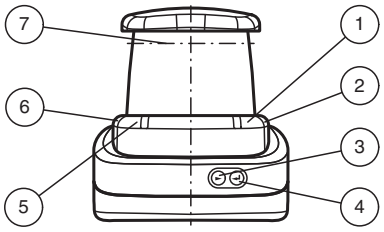

1	Operating status	green
2	Fault indication	red
3	Menu button	
4	Menu button	
5	Q2 signal indicator	yellow
6	Q1 signal indicator	yellow
7	Laser outlet	

Safety Information

Laser Class 1 Information
Maintenance and repairs should only be carried out by authorized service personnel!
Attach the device so that the warning is clearly visible and readable.
Caution – Use of controls or adjustments or performance of procedures other than those specified herein may result in hazardous radiation exposure.

Release date: 2024-09-17 Date of issue: 2024-09-17 Filename: 70112344_eng.pdf

2-D LiDAR Sensor

OBD30M-R2000-4EP-V1V17-1L

- 4 freely programmable monitoring fields
- 4 inputs/outputs (selectable)
- High operating range
- High angle resolution
- 360°-angle of measurement
- Measuring method PRT (Pulse Ranging Technology)

R2000 Detection, 2-D LiDAR sensor for precise field monitoring, measuring range to object up to 30 m with three M12 x 1 connector plugs

Function

Based on Pulse Ranging Technology (PRT), the sensor is powerful for measurements with a long range and a small light spot. The device scans its environment over the complete measuring angle of 360°. Due to the high scanning frequency, this sensor type is suitable for advanced applications. The device meets laser class 1 and is eye safe. Additional precautions to protect the operating personnel are not required. The interactive all-round display integrated in the optical surface can freely display individual texts and graphics. A wide range of accessories enables the sensor to be used in different applications. A PACTware device type manager (DTM) specially developed for this series offers extensive configuration and diagnostic options.

Dimensions

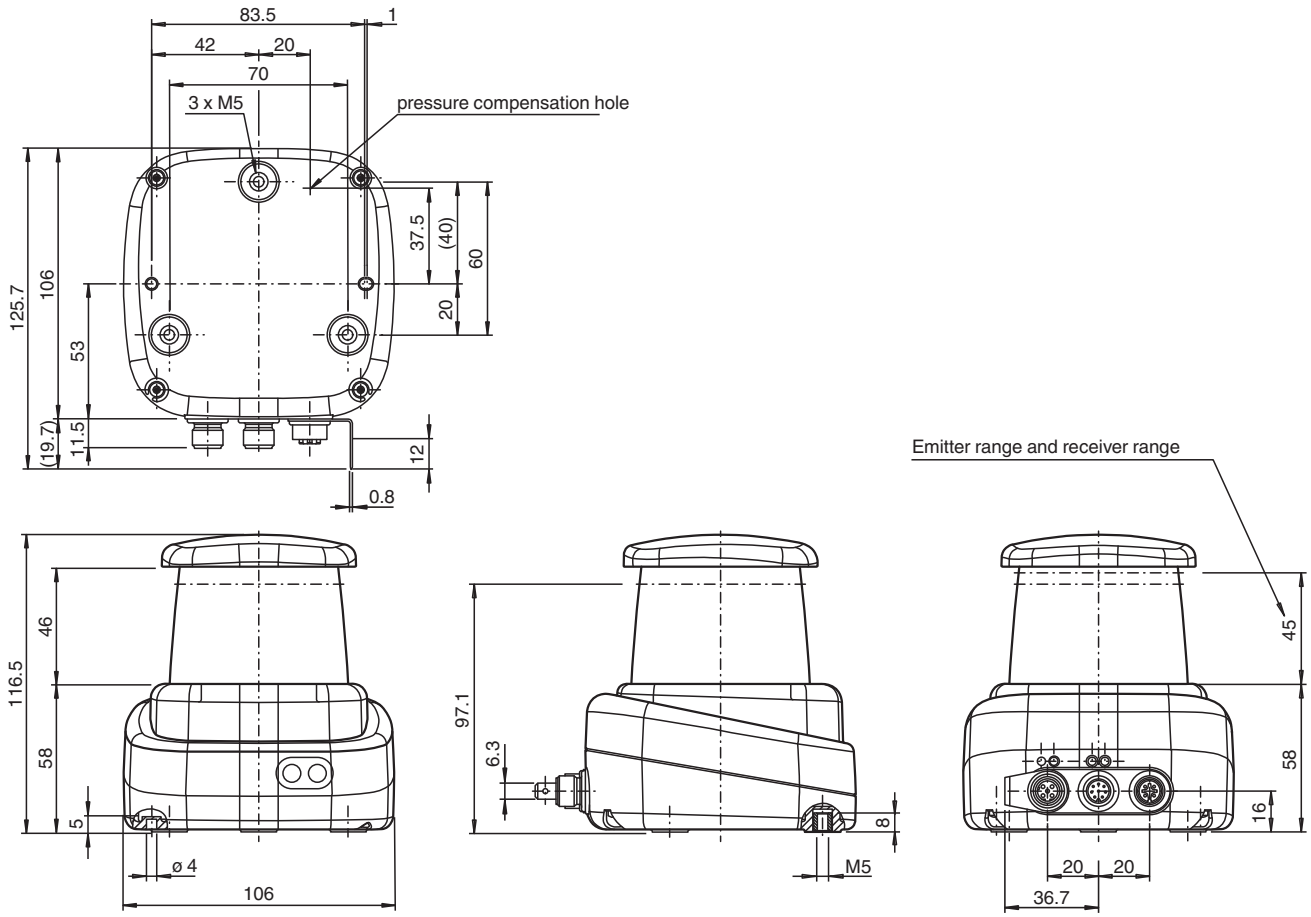

Technical Data

General specifications	
Measurement range	0.1 ... 10 m (bk 10%) 0,1 … 30 m (wh 90 %) 0,1 … 30 m (reflector) Min. reflectivity 2.5%
Light source	laser diode
Light type	modulated infrared light
Laser nominal ratings	
Note	LASER RADIATION , DO NOT STARE INTO BEAM
Laser class	1
Wave length	905 nm
Beam divergence	transversal 2 mrad , longitudinal 10 mrad
Pulse length	5 ns
Repetition rate	54 kHz
max. pulse energy	< 94 nJ
Measuring method	Pulse Ranging Technology (PRT)
Scan rate	10 Hz, 20 Hz, 30 Hz
Scanning angle	360°
Diameter of the light spot	25 mm x 105 mm at 10 m
Ambient light limit	80000 Lux
Functional safety related parameters	
$MTTF_d$	75 a
Mission Time (T_M)	20 a

Release date: 2024-09-17 Date of issue: 2024-09-17 Filename: 70112345_eng.pdf

Technical Data

Diagnostic Coverage (DC)		0 %
Indicators/operating means		
Operation indicator		LED green
Data flow indicator		LED yellow: active ethernet LED green: Ethernet link
Function indicator		LED red: fault LED yellow: Q1 + Q2
Control elements		2 Button
Parameterization indicator		24 x 252 pixels , red
Electrical specifications		
Operating voltage	U_B	10 ... 30 V DC
Ripple		10 % within the supply tolerance
No-load supply current	I_0	≤ 400 mA / 24 V DC
Power consumption	P_0	< 10 W
Time delay before availability	t_v	< 40 s
Integrated application		
Application		Field monitoring
Number of fields		4
Response time		30 ms + 1 Scan duration
Detectable object shape		Almost any
Object size		> 1 mm
Linking fields		Up to 4 x 3 levels
Interface		
Interface type		4 x switching inputs/outputs (selectable)
Input/Output		
Input/output type		4 Inputs/Outputs , Independently configurable , short circuit/reverse polarity protected
Input		
Switching threshold		low: Ue < 5 V, high: Ue > 10 V
Output		
Switching threshold		low: Ua < 1 V, high: Ua > Ub - 2 V
Switching current		100 mA per output
Conformity		
Laser safety		EN 60825-1:2014
Compliance with standards and directives		
Standard conformity		
Product standard		IEC 61000-6-2
Shock and impact resistance		EN 60068-2-6 EN 60068-2-27
Measurement accuracy		
Measuring speed		54000 measurements per second
Angle resolution		0,071°; 0,15°; 0,2°
Repeat accuracy		< 12 mm
Approvals and certificates		
Protection class		III (operating voltage 50 V)
UL approval		cULus Listed, Class 2 Power Source, Type 1 enclosure
CCC approval		CCC approval / marking not required for products rated ≤36 V
Ambient conditions		
Ambient temperature		-10 ... 50 °C (14 ... 122 °F)
Storage temperature		-20 ... 70 °C (-4 ... 158 °F)
Relative humidity		95 % , no moisture condensation
Mechanical specifications		
Degree of protection		IP65

Release date: 2024-09-17 Date of issue: 2024-09-17 Filename: 70112345_eng.pdf

Technical Data

Connection	4-pin, M12x1 connector, standard (supply) , 8-pin, M12x1 connector, A-coded (MultiPort) , 4-pin, M12x1 socket, D-coded (LAN)
Material	
Housing	ABS + PC + Aluminum
Optical face	PMMA
Mass	approx. 0.8 kg
Dimensions	
Height	116.5 mm
Width	106 mm
Length	106 mm

Connection Assignment

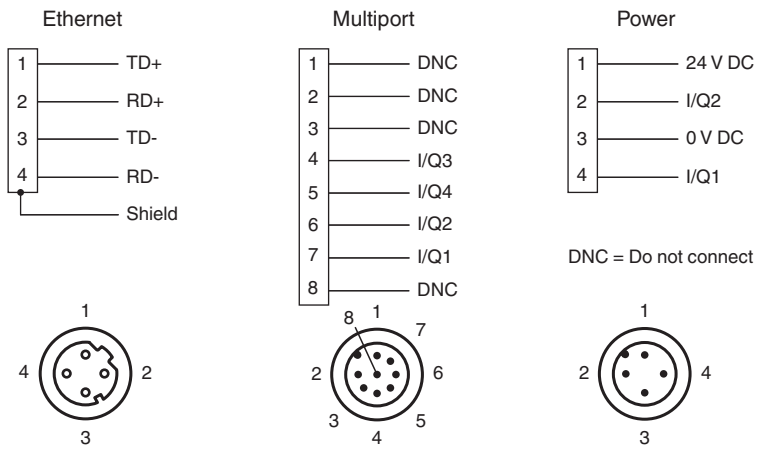

Assembly

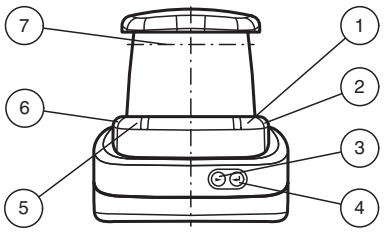

1	Operating status	green
2	Fault indication	red
3	Menu button	
4	Menu button	
5	Q2 signal indicator	yellow
6	Q1 signal indicator	yellow
7	Laser outlet	

Safety Information

Laser Class 1 Information
Maintenance and repairs should only be carried out by authorized service personnel!
Attach the device so that the warning is clearly visible and readable.
Caution – Use of controls or adjustments or performance of procedures other than those specified herein may result in hazardous radiation exposure.

Release date: 2024-09-17 Date of issue: 2024-09-17 Filename: 70112345_eng.pdf

2-D LiDAR Sensor

OMD25M-R2000-B23-V1V1D-SD-1L

- High operating range
- High angle resolution
- Infrared light
- Measuring method PRT (Pulse Ranging Technology)

R2000 SD, 2-D LiDAR sensor for simple measurement tasks and positioning, measuring range to object up to 25 m, Ethernet

Function

Based on Pulse Ranging Technology (PRT), the sensor is powerful for measurements with a long range and a small light spot. The device scans its environment over the complete measuring angle of 360°. Due to the high scanning frequency, this sensor type is suitable for advanced applications. The device meets laser class 1 and is eye safe. Additional precautions to protect the operating personnel are not required. The interactive all-round display integrated in the optical surface can freely display individual texts and graphics. A wide range of accessories enables the sensor to be used in different applications. A PACTware device type manager (DTM) specially developed for this series offers extensive configuration and diagnostic options.

Dimensions

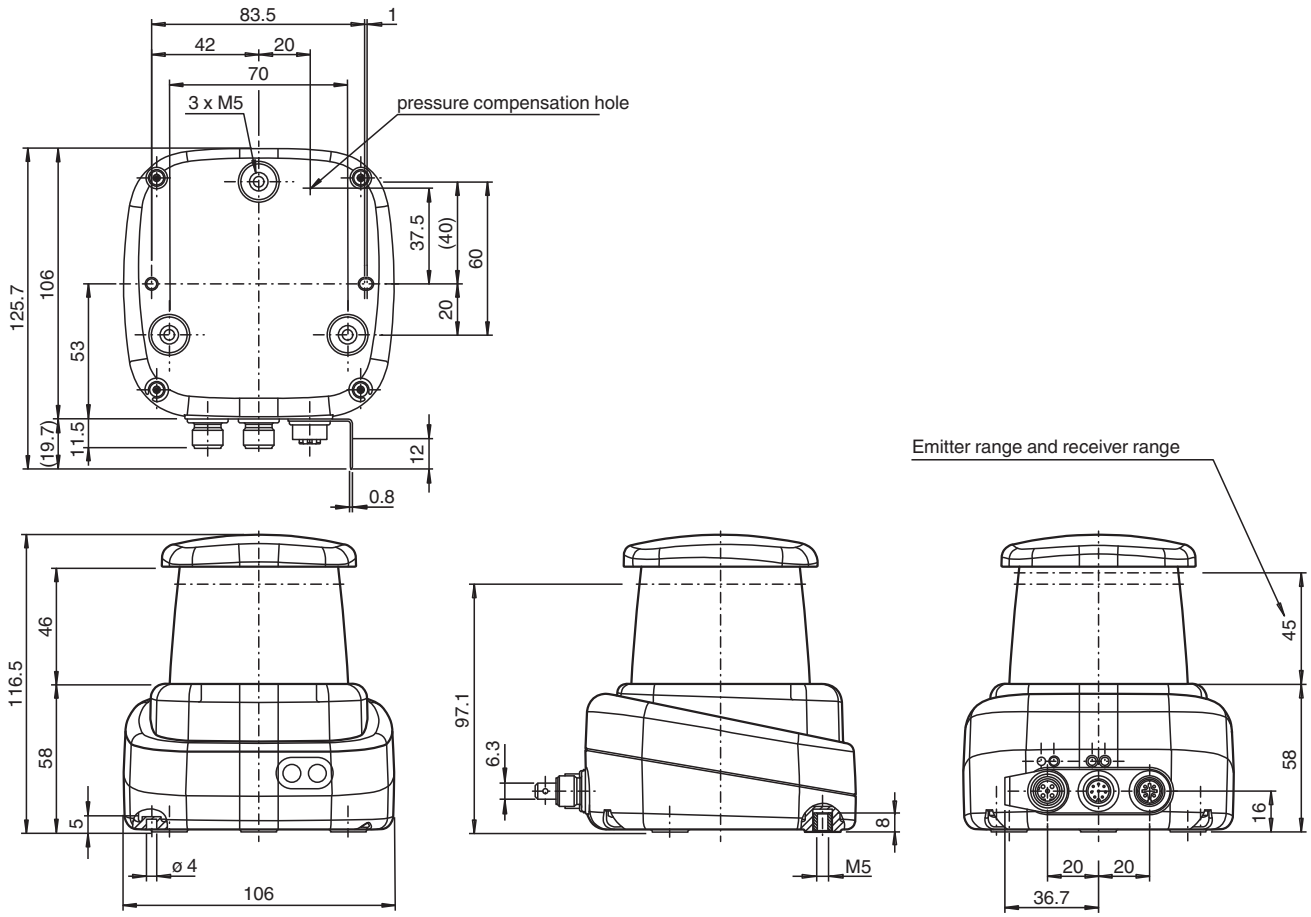

Technical Data

General specifications	
Measurement range	0.1 ... 10 m (bk 10%) 0.1 … 25 m (wh 90 %) 0.1 … 25 m (reflector) Min. reflectivity 2.5%
Light source	laser diode
Light type	modulated infrared light
Laser nominal ratings	
Note	LASER RADIATION , DO NOT STARE INTO BEAM
Laser class	1
Wave length	905 nm
Beam divergence	transversal 2 mrad , longitudinal 10 mrad
Pulse length	5 ns
Repetition rate	72 kHz
max. pulse energy	< 94 nJ
Measuring method	Pulse Ranging Technology (PRT)
Scan rate	10 ... 30 s^{-1}
Scanning angle	360°
Diameter of the light spot	25 mm x 105 mm at 10 m
Ambient light limit	80000 Lux
Resolution	1 mm
Functional safety related parameters	
$MTTF_d$	75 a

Release date: 2023-04-05 Date of issue: 2023-04-05 Filename: 70119140_eng.pdf

Technical Data

Mission Time (T_M)		20 a
Diagnostic Coverage (DC)		0 %
Indicators/operating means		
Operation indicator		LED green
Data flow indicator		LED yellow: active ethernet LED green: Ethernet link
Function indicator		LED red: fault LED yellow: Q1 + Q2
Control elements		2 Button
Parameterization indicator		24 x 252 pixels , red
Electrical specifications		
Operating voltage	U_B	10 ... 30 V DC
Ripple		10 % within the supply tolerance
No-load supply current	I_0	≤ 400 mA / 24 V DC
Power consumption	P_0	< 10 W
Time delay before availability	t_v	< 40 s
Interface		
Interface type		Fast Ethernet, 2 switching outputs
Protocol		HTTP , TCP/IP and UDP/IP
Input/Output		
Input/output type		2 Outputs , Independently configurable , short circuit/reverse polarity protected
Output		
Switching threshold		low: Ua < 1 V, high: Ua > Ub - 2 V
Switching current		100 mA per output
Conformity		
Laser safety		EN 60825-1:2014
Compliance with standards and directives		
Standard conformity		
Product standard		IEC 60947-5-2
Shock and impact resistance		EN 60068-2-6 EN 60068-2-27
Measurement accuracy		
Measuring speed		72000 measurements per second
Measured value noise		typ. ± 20 mm (1 sigma)
Angle resolution		0.05 °
Absolute accuracy		typ. ± 40 mm
Repeat accuracy		< 12 mm
Approvals and certificates		
Protection class		III (operating voltage 50 V)
UL approval		cULus Listed, Class 2 Power Source, Type 1 enclosure
CCC approval		CCC approval / marking not required for products rated ≤36 V
Ambient conditions		
Ambient temperature		-10 ... 50 °C (14 ... 122 °F)
Storage temperature		-20 ... 70 °C (-4 ... 158 °F)
Relative humidity		95 % , no moisture condensation
Mechanical specifications		
Housing width		106 mm
Housing height		116.5 mm
Degree of protection		IP65
Connection		4-pin, M12x1 connector, standard (supply) , 8-pin, M12x1 connector, A-coded (MultiPort) , 4-pin, M12x1 socket, D-coded (LAN)
Material		
Housing		ABS + PC + Aluminum

Release date: 2023-04-05 Date of issue: 2023-04-05 Filename: 70119140_eng.pdf

Technical Data

Optical face	PMMA
Mass	approx. 0.8 kg

Connection Assignment

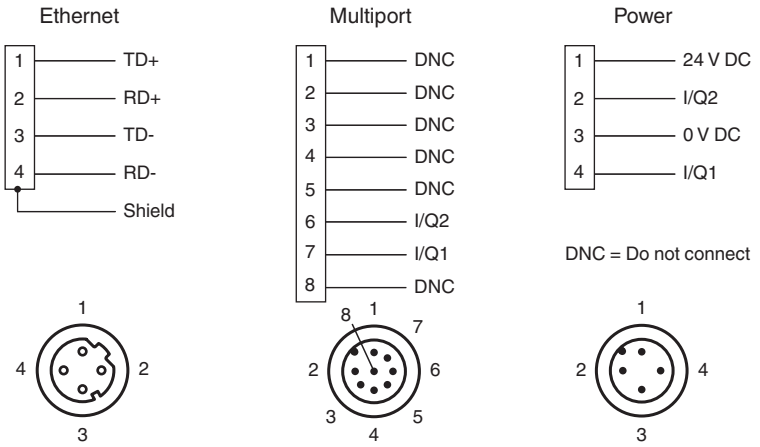

Assembly

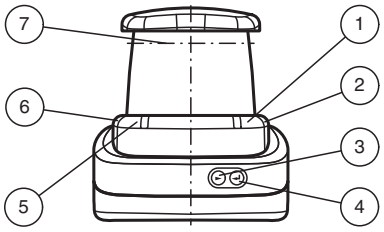

1	Operating status	green
2	Fault indication	red
3	Menu button	
4	Menu button	
5	Q2 signal indicator	yellow
6	Q1 signal indicator	yellow
7	Laser outlet	

Characteristic Curve

Echoamplitude characteristic

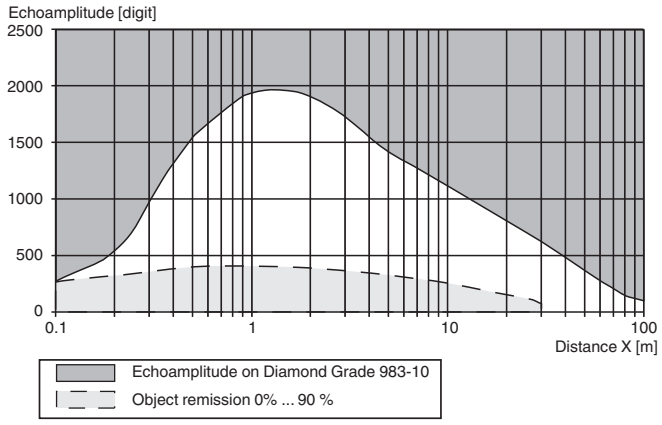

Release date: 2023-04-05 Date of issue: 2023-04-05 Filename: 70119140_eng.pdf

Safety Information

Laser Class 1 Information
Maintenance and repairs should only be carried out by authorized service personnel!
Attach the device so that the warning is clearly visible and readable.
Caution – Use of controls or adjustments or performance of procedures other than those specified herein may result in hazardous radiation exposure.

Accessories

	Schutzkappe LS610 Zubehoer	M12 protective cap set (connector + socket) for series LS610 / LS611
	Funktionserdung LS610/VDM100 Zubehoer	Function grounding for LS610 / LS611 / VDM100 series
	V1SD-G-2M-PUR-ABG-V45-G	Connection cable, M12 to RJ-45, PUR cable 4-pin, CAT5e
	V1SD-G-ABG-PG9	Male connector M12 straight D-coded 4-pin, for cable diameter 5 - 8 mm, shielded, field-attachable
	V1-G-5M-PUR	Female cordset single-ended M12 straight A-coded, 4-pin, PUR cable grey
	V1-G-BK5M-PUR-U	Female cordset single-ended M12 straight A-coded, 4-pin, PUR cable black, UL approved, drag chain suitable, torsion resistant
	MH-R2000	Mounting aid for R2000 series, Quick clamp and adjustment system
PACTware	**PACTware 5.0**	FDT Framework

Release date: 2023-04-05 Date of issue: 2023-04-05 Filename: 70119140_eng.pdf

2-D LiDAR Sensor

OMD6000-R2100-B16-2V15

- Distance measurement using object
- Two-dimensional measurement with no moving parts
- Measurement using eye-safe LED technology
- 88° scanning angle
- CANopen interface
- Measuring method PRT (Pulse Ranging Technology)

Multi-ray LED scanner for measuring the distance to an object, measuring method: PRT, measuring range: up to 6 m on white, 2x M12 plugs

Function

The new 2-dimensional multi-ray LED scanner uses tried-and-tested Pulse Ranging Technology and boasts a wide range of user-friendly features. The eye-safe LED technology in the sensor allows it to be used by personnel in all working areas without posing a danger. The 11 emitter elements arranged side by side span a scanning range of 88 degrees, while the emitter LEDs set themselves apart through their large light spot. Measuring on a surface rather than on a point makes it easier to measure inhomogeneous surfaces. A further highlight is the absence of any moving parts such as a motor or bearings, which makes the device less complex in its design and more resistant to mechanical stress.

Dimensions

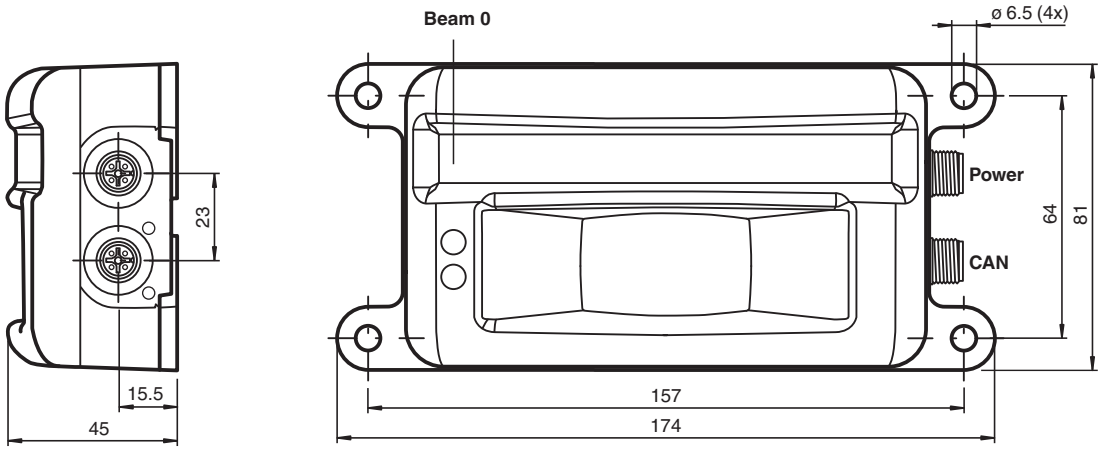

Release date: 2022-08-04 Date of issue: 2022-08-04 Filename: 70126885_eng.pdf

Technical Data

General specifications		
Measurement range		0.2 ... 6 m (wh 90%)
Light source		IRED
Light type		modulated infrared light , 850 nm
Measuring method		Pulse Ranging Technology (PRT)
Scan rate		50 s^{-1} (1 scan = 11 measurements)
Scanning angle		88°
Diameter of the light spot		550 mm at 4 m (orthogonal)
Ambient light limit		> 80000 Lux
Resolution		1 mm
Functional safety related parameters		
$MTTF_d$		123 a
Mission Time (T_M)		20 a
Diagnostic Coverage (DC)		0 %
Indicators/operating means		
Operation indicator		LED green
Data flow indicator		LED red: CAN Error LED green: CAN Run
Function indicator		LED yellow
Electrical specifications		
Operating voltage	U_B	10 ... 30 V DC
Ripple		10 % within the supply tolerance
No-load supply current	I_0	≤ 120 mA / 24 V DC
Protection class		III
Time delay before availability	t_v	< 3 s
Interface		
Interface type		CAN
Protocol		CANopen, 500 kbit/s
Conformity		
Product standard		EN 60947-5-2
Measurement accuracy		
Measured value noise		20 mm (1 sigma, 4 m on white, orthogonal)
Angle resolution		8 °
Absolute accuracy		+/- 50 mm (orthogonal)
Approvals and certificates		
EAC conformity		TR CU 020/2011
UL approval		cULus Listed, Class 2 Power Source, Type 1 enclosure
CCC approval		CCC approval / marking not required for products rated ≤36 V
Ambient conditions		
Ambient temperature		-30 ... 60 °C (-22 ... 140 °F) UL: -10 ... 50 °C (14 ... 122 °F)
Storage temperature		-30 ... 70 °C (-22 ... 158 °F)
Relative humidity		95 % , no moisture condensation
Mechanical specifications		
Housing width		81 mm
Housing height		45 mm
Degree of protection		IP67
Connection		5-pin, M12x1 connector, standard (supply; color black) 5-pin, M12x1 connector, standard (CANopen; color grey)
Material		
Housing		plastic
Optical face		Lexan (PC)
Mass		approx. 250 g

Release date: 2022-08-04 Date of issue: 2022-08-04 Filename: 70126885_eng.pdf

Connection Assignment

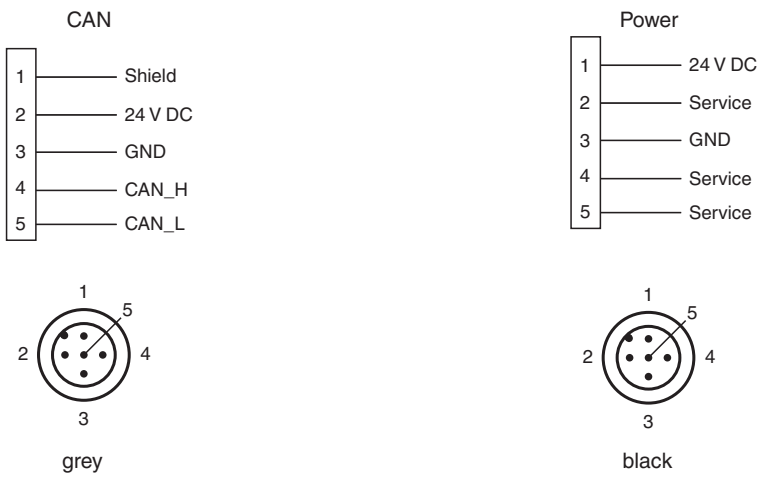

Assembly

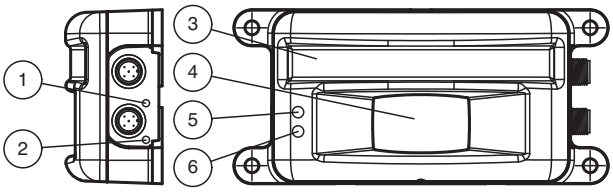

1	CAN ERROR	red
2	CAN RUN	green
3	Emitter	
4	Receiver	
5	Operating indicator	green
6	Function indicator	yellow

Installation

Installation Instructions for North America
If a connection is made to the M12 multi-pin connector, the product shall be used with a UL-listed cable/connector (CYJV) assembly rated minimum 30 V DC, minimum 1.0 A, in the final installation for power supply.

Characteristic Curve

Beam geometry

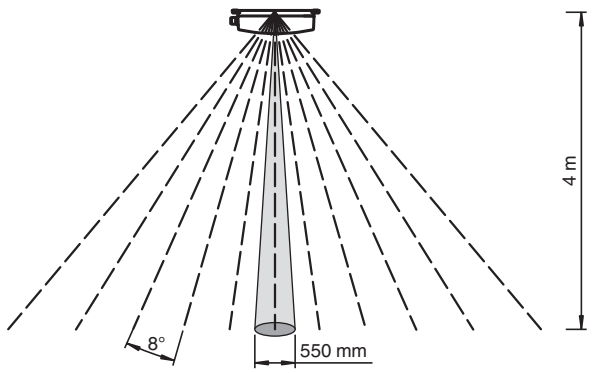

Release date: 2022-08-04 Date of issue: 2022-08-04 Filename: 70126885_eng.pdf

Accessories

	V1-G-2M-PUR	Female cordset single-ended M12 straight A-coded, 4-pin, PUR cable grey
	V1-W-2M-PUR	Female cordset single-ended M12 angled A-coded, 4-pin, PUR cable grey
	V15-G-5M-PUR-ABG	Female cordset single-ended M12 straight A-coded, 5-pin, PUR cable grey, shielded
	V1-G-BK5M-PUR-U	Female cordset single-ended M12 straight A-coded, 4-pin, PUR cable black, UL approved, drag chain suitable, torsion resistant
	V1-W-BK5M-PUR-U	Female cordset single-ended M12 angled A-coded, 4-pin, PUR cable black, UL approved, drag chain suitable, torsion resistant

Release date: 2022-08-04 Date of issue: 2022-08-04 Filename: 70126885_eng.pdf

2-D LiDAR Sensor

OMD8000-R2100-B16-2V15

- Distance measurement using object
- Two-dimensional measurement with no moving parts
- Measurement using eye-safe LED technology
- 88° scanning angle
- CANopen interface
- Measuring method PRT (Pulse Ranging Technology)

Multi-ray LED scanner for measuring the distance to an object, measuring method: PRT, measuring range: up to 8 m on white, 2x M12 plugs

Function

The new 2-dimensional multi-ray LED scanner uses tried-and-tested Pulse Ranging Technology and boasts a wide range of user-friendly features. The eye-safe LED technology in the sensor allows it to be used by personnel in all working areas without posing a danger. The 11 emitter elements arranged side by side span a scanning range of 88 degrees, while the emitter LEDs set themselves apart through their large light spot. Measuring on a surface rather than on a point makes it easier to measure inhomogeneous surfaces. A further highlight is the absence of any moving parts such as a motor or bearings, which makes the device less complex in its design and more resistant to mechanical stress.

Dimensions

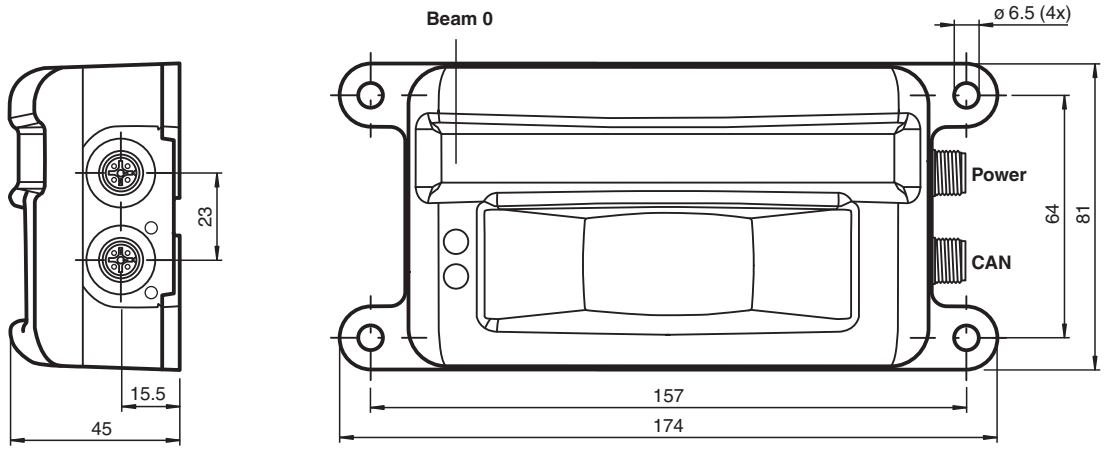

Technical Data

General specifications	
Measurement range	0.2 ... 2 m (bw 6%) 0.2 … 8 m (wh 90 %)
Light source	IRED
Light type	modulated infrared light , 850 nm
Measuring method	Pulse Ranging Technology (PRT)
Scan rate	50 s^{-1} (1 scan = 11 measurements)
Scanning angle	88°
Diameter of the light spot	550 mm at 4 m (orthogonal)
Ambient light limit	> 80000 Lux
Resolution	1 mm

Release date: 2023-09-05 Date of issue: 2023-09-05 Filename: 70126890_eng.pdf

Technical Data

Functional safety related parameters		
$MTTF_d$		123 a
Mission Time (T_M)		20 a
Diagnostic Coverage (DC)		0 %
Indicators/operating means		
Operation indicator		LED green
Data flow indicator		LED red: CAN Error LED green: CAN Run
Function indicator		LED yellow
Electrical specifications		
Operating voltage	U_B	10 ... 30 V DC
Ripple		10 % within the supply tolerance
No-load supply current	I_0	≤ 120 mA / 24 V DC
Protection class		III
Time delay before availability	t_v	< 3 s
Interface		
Interface type		CAN
Protocol		CANopen, 250 kbit/s
Conformity		
Product standard		EN 60947-5-2
Measurement accuracy		
Measured value noise		20 mm (1 sigma, 4 m on white, orthogonal)
Angle resolution		8 °
Absolute accuracy		+/- 50 mm (orthogonal)
Approvals and certificates		
UL approval		cULus Listed, Class 2 Power Source, Type 1 enclosure
CCC approval		CCC approval / marking not required for products rated ≤36 V
Ambient conditions		
Ambient temperature		-30 ... 60 °C (-22 ... 140 °F) UL: -10 ... 50 °C (14 ... 122 °F)
Storage temperature		-30 ... 70 °C (-22 ... 158 °F)
Relative humidity		95 % , no moisture condensation
Mechanical specifications		
Housing width		81 mm
Housing height		45 mm
Degree of protection		IP67
Connection		5-pin, M12x1 connector, standard (supply; color black) 5-pin, M12x1 connector, standard (CANopen; color grey)
Material		
Housing		plastic
Optical face		Lexan (PC)
Mass		approx. 250 g

Release date: 2023-09-05 Date of issue: 2023-09-05 Filename: 70126890_eng.pdf

Connection Assignment

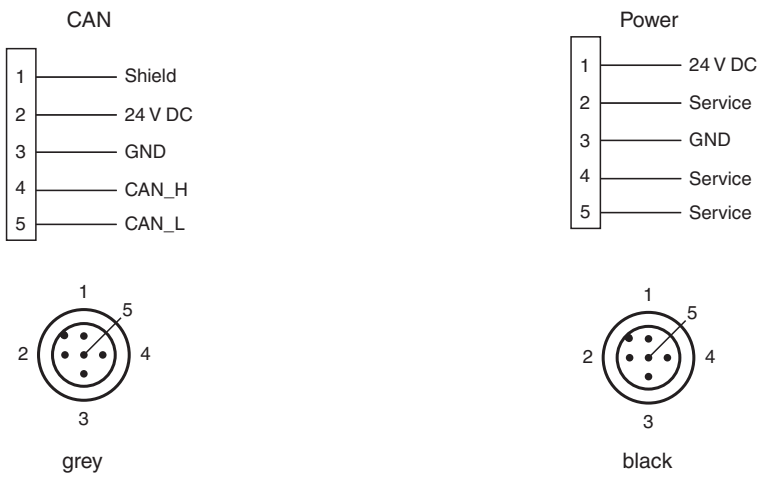

Assembly

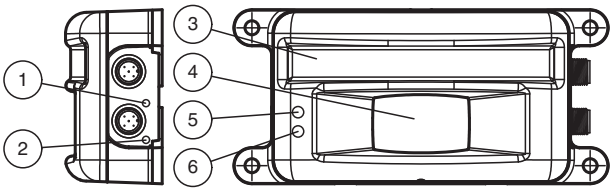

1	CAN ERROR	red
2	CAN RUN	green
3	Emitter	
4	Receiver	
5	Function indicator	yellow
6	Operating indicator	green

Installation

Installation Instructions for North America
If a connection is made to the M12 multi-pin connector, the product shall be used with a UL-listed cable/connector (CYJV) assembly rated minimum 30 V DC, minimum 1.0 A, in the final installation for power supply.

Characteristic Curve

Echoamplitude characteristic

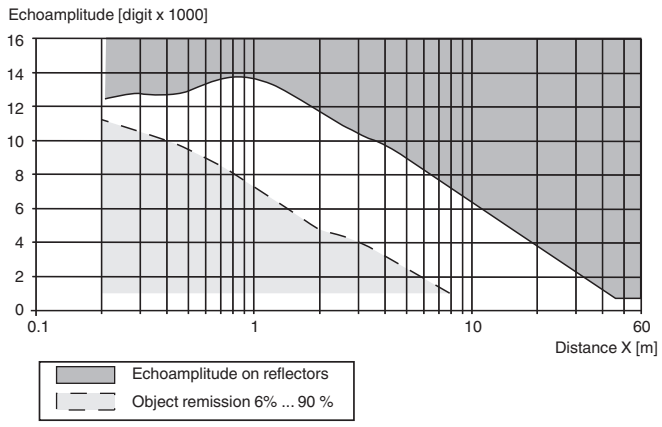

Release date: 2023-09-05 Date of issue: 2023-09-05 Filename: 70126890_eng.pdf

Characteristic Curve

Beam geometry

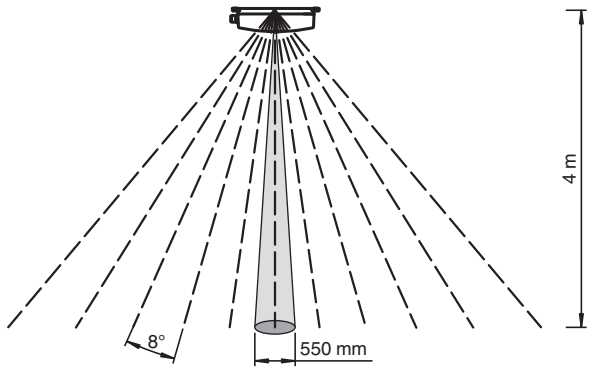

Accessories

	V15S-T-CAN/DN-V15	Y-Splitter M12 socket to M12 plug / M12 socket 5-pin A-coded
	V15S-TR-CAN/DN-120R	Terminal resistor for DeviceNet, CANopen
	V15-G-VT2M-PUR-U/CAN	DeviceNet/CANOpen bus cable female cordset single-ended M12 straight A-coded, 5-pin, PUR cable violet, shielded, UL approved, drag chain suitable, salt water resistant
	V15-G-VT2M-PUR-U/CAN-V15-G	DeviceNet/CANOpen bus cable M12 socket straight to M12 plug straight A-coded, 5-pin, PUR cable violet, shielded, UL approved, drag chain suitable, salt water resistant

Release date: 2023-09-05 Date of issue: 2023-09-05 Filename: 70126890_eng.pdf

2-D LiDAR Sensor

OBD60M-R2000-1L-Y70132754

- 4 freely programmable monitoring fields
- 4 inputs/outputs (selectable)
- High operating range
- High angle resolution
- 360°-angle of measurement
- Measuring method PRT (Pulse Ranging Technology)

R2000 Detection, 2-D LiDAR sensor for precise field monitoring, measuring range to object up to 60 m

Function

Based on Pulse Ranging Technology (PRT), the sensor is powerful for measurements with a long range and a small light spot. The device scans its environment over the complete measuring angle of 360°. Due to the high scanning frequency, this sensor type is suitable for advanced applications. The device meets laser class 1 and is eye safe. Additional precautions to protect the operating personnel are not required. The interactive all-round display integrated in the optical surface can freely display individual texts and graphics. A wide range of accessories enables the sensor to be used in different applications. A PACTware device type manager (DTM) specially developed for this series offers extensive configuration and diagnostic options.

Dimensions

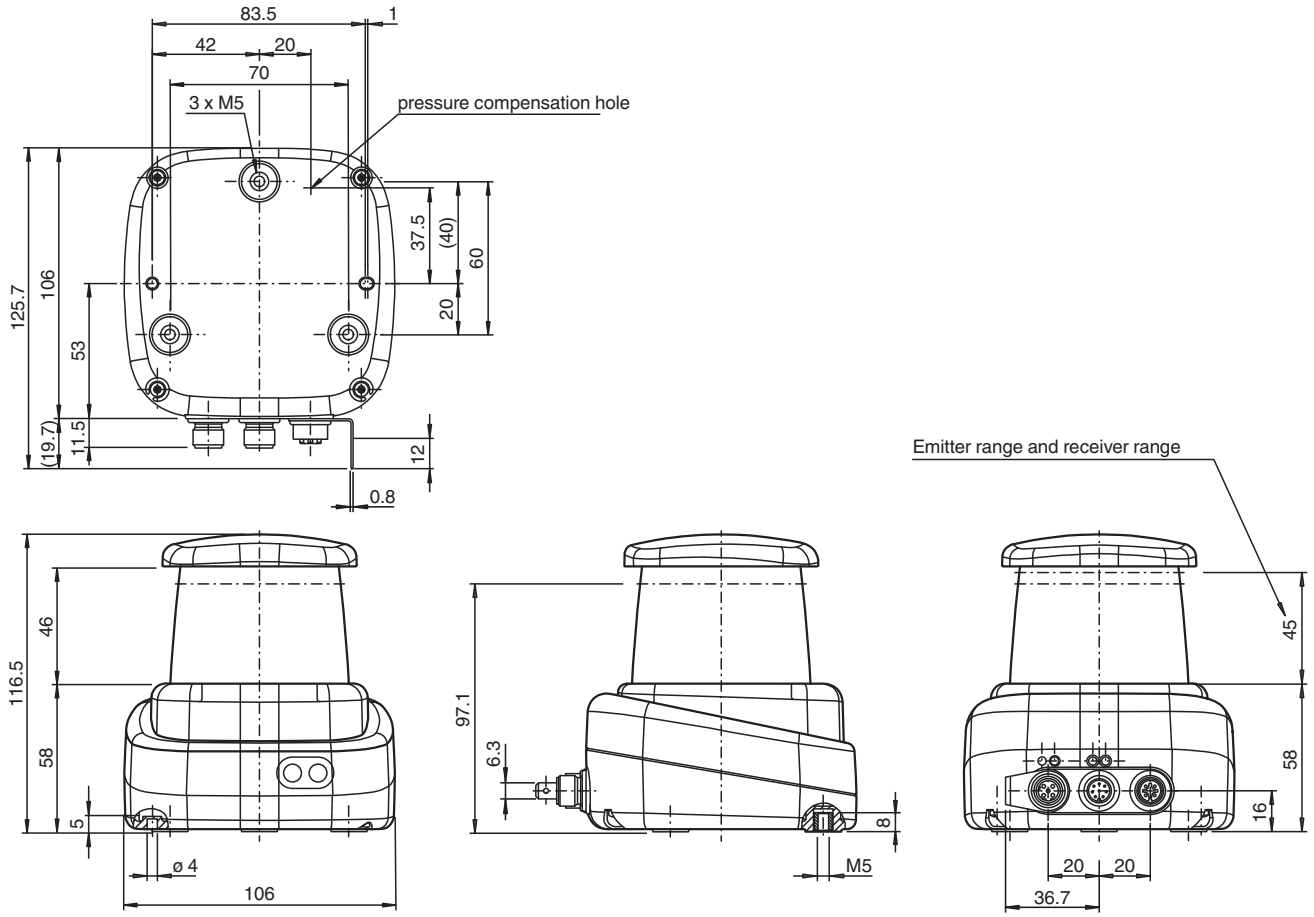

Release date: 2024-09-17 Date of issue: 2024-09-17 Filename: 70132754_eng.pdf

Technical Data

General specifications		
Measurement range		0.1 … 20 m (bw 10 %) 0.1 … 60 m (wb 90 %) 0.1 … 60 m (reflector) Min. reflectivity 1.8 %
Light source		laser diode
Light type		modulated infrared light
Laser nominal ratings		
Note		LASER RADIATION , DO NOT STARE INTO BEAM
Laser class		1
Wave length		905 nm
Beam divergence		transversal 10 mrad , longitudinal 2 mrad
Pulse length		5 ns
Repetition rate		54 kHz
max. pulse energy		< 94 nJ
Measuring method		Pulse Ranging Technology (PRT)
Scan rate		10 Hz, 20 Hz, 30 Hz
Scanning angle		360°
Diameter of the light spot		105 mm x 25 mm at 10 m
Ambient light limit		50000 Lux
Functional safety related parameters		
$MTTF_d$		75 a
Mission Time (T_M)		20 a
Diagnostic Coverage (DC)		0 %
Indicators/operating means		
Operation indicator		LED green
Data flow indicator		LED yellow: active ethernet LED green: Ethernet link
Function indicator		LED red: fault LED yellow: Q1 + Q2
Control elements		2 Button
Parameterization indicator		24 x 252 pixels , red
Electrical specifications		
Operating voltage	U_B	10 ... 30 V DC
Ripple		10 % within the supply tolerance
No-load supply current	I_0	≤ 400 mA / 24 V DC
Power consumption	P_0	< 10 W
Time delay before availability	t_v	< 40 s
Integrated application		
Application		Field monitoring
Number of fields		4
Response time		30 ms + 1 Scan duration
Detectable object shape		Almost any
Object size		> 1 mm
Linking fields		Up to 4 x 3 levels
Interface		
Interface type		4 x switching inputs/outputs (selectable)
Input/Output		
Input/output type		4 Inputs/Outputs , Independently configurable , short circuit/reverse polarity protected
Input		
Switching threshold		low: Ue < 5 V, high: Ue > 10 V
Output		
Switching threshold		low: Ua < 1 V, high: Ua > Ub - 2 V
Switching current		100 mA per output

Release date: 2024-09-17 Date of issue: 2024-09-17 Filename: 70132754_eng.pdf

Technical Data

Conformity	
Laser safety	EN 60825-1:2014
Compliance with standards and directives	
Standard conformity	
Product standard	IEC 61000-6-2
Shock and impact resistance	EN 60068-2-6 EN 60068-2-27
Measurement accuracy	
Measuring speed	54000 measurements per second
Angle resolution	0,071°; 0,15°; 0,2°
Repeat accuracy	< 12 mm
Approvals and certificates	
Protection class	III (operating voltage 50 V)
UL approval	cULus Listed, Class 2 Power Source, Type 1 enclosure
CCC approval	CCC approval / marking not required for products rated ≤36 V
Ambient conditions	
Ambient temperature	-10 ... 50 °C (14 ... 122 °F)
Storage temperature	-20 ... 70 °C (-4 ... 158 °F)
Relative humidity	95 % , no moisture condensation
Mechanical specifications	
Degree of protection	IP65
Connection	4-pin, M12x1 connector, standard (supply) , 8-pin, M12x1 connector, A-coded (MultiPort) , 4-pin, M12x1 socket, D-coded (LAN)
Material	
Housing	ABS + PC + Aluminum
Optical face	PMMA
Mass	approx. 0.8 kg
Dimensions	
Height	116.5 mm
Width	106 mm
Length	106 mm

Connection Assignment

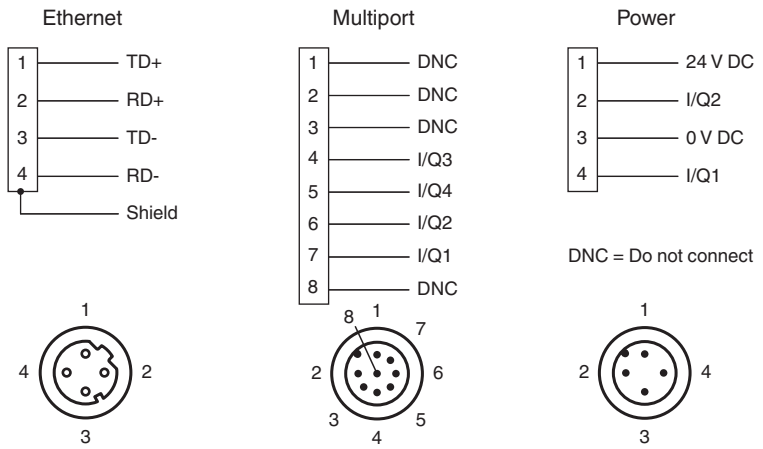

Release date: 2024-09-17 Date of issue: 2024-09-17 Filename: 70132754_eng.pdf

Assembly

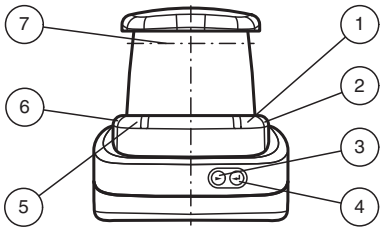

1	Operating status	green
2	Fault indication	red
3	Menu button	
4	Menu button	
5	Q2 signal indicator	yellow
6	Q1 signal indicator	yellow
7	Laser outlet	

Safety Information

Laser Class 1 Information
Maintenance and repairs should only be carried out by authorized service personnel!
Attach the device so that the warning is clearly visible and readable.
Caution – Use of controls or adjustments or performance of procedures other than those specified herein may result in hazardous radiation exposure.

Release date: 2024-09-17 Date of issue: 2024-09-17 Filename: 70132754_eng.pdf

2-D LiDAR Sensor

OBD60M-R2000-4EP-V1V17-T-1L

- 4 freely programmable monitoring fields
- 4 inputs/outputs (selectable)
- High operating range
- High angle resolution
- 360°-angle of measurement
- Deep-freeze applications
- Measuring method PRT (Pulse Ranging Technology)

R2000 Detection, 2-D LiDAR sensor for precise field monitoring, measuring range to object up to 60 m

Function

Based on Pulse Ranging Technology (PRT), the sensor is powerful for measurements with a long range and a small light spot. The device scans its environment over the complete measuring angle of 360°. Due to the high scanning frequency, this sensor type is suitable for advanced applications. The device meets laser class 1 and is eye safe. Additional precautions to protect the operating personnel are not required. The interactive all-round display integrated in the optical surface can freely display individual texts and graphics. A wide range of accessories enables the sensor to be used in different applications. A PACTware device type manager (DTM) specially developed for this series offers extensive configuration and diagnostic options.

Dimensions

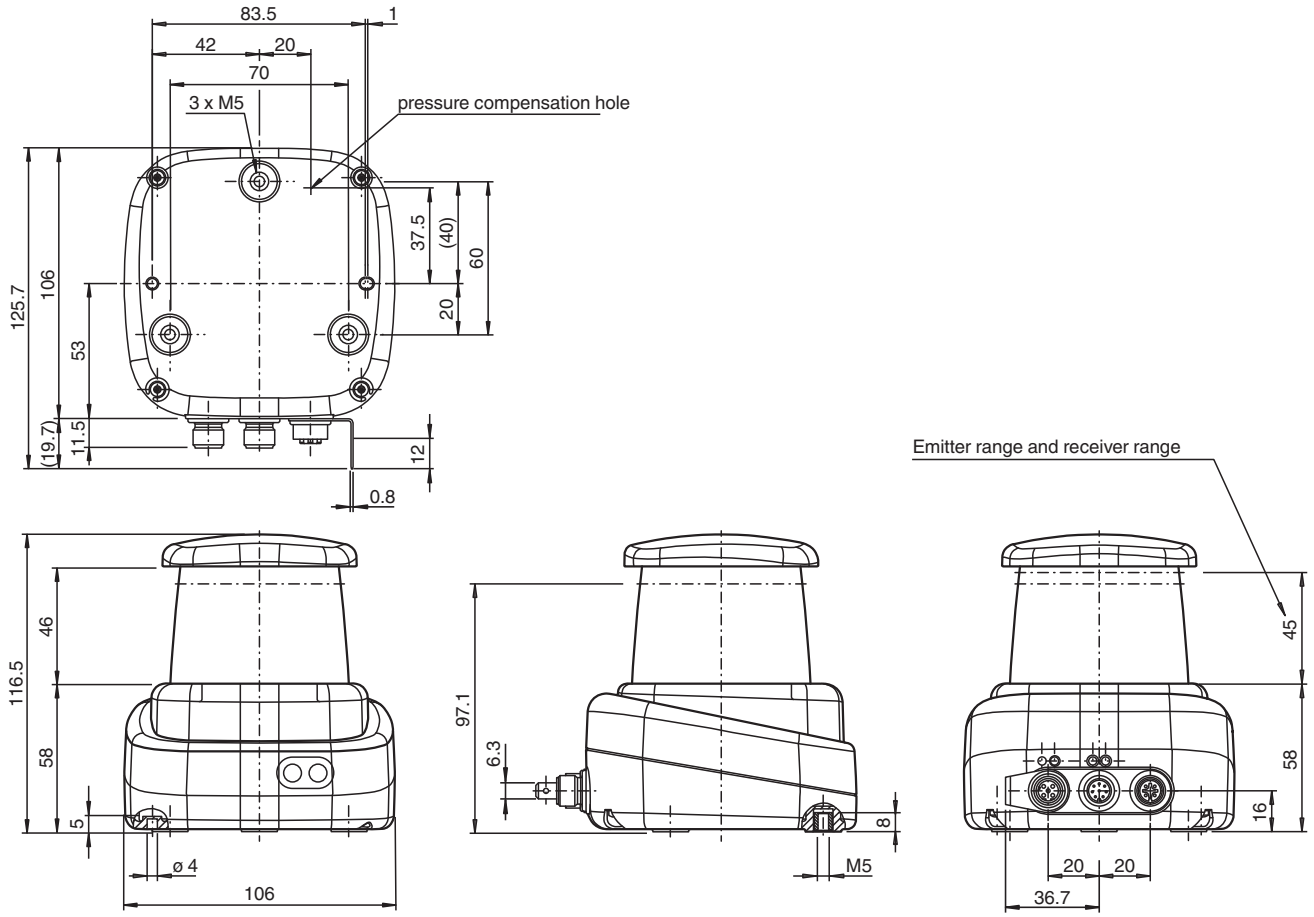

Release date: 2024-09-17 Date of issue: 2024-09-17 Filename: 70137274_eng.pdf

Technical Data

General specifications		
Measurement range		0.1 … 20 m (bw 10 %) 0.1 … 60 m (wb 90 %) 0.1 … 60 m (reflector) Min. reflectivity 1.8 %
Light source		laser diode
Light type		modulated infrared light
Laser nominal ratings		
Note		LASER RADIATION , DO NOT STARE INTO BEAM
Laser class		1
Wave length		905 nm
Beam divergence		transversal 2 mrad , longitudinal 10 mrad
Pulse length		5 ns
Repetition rate		54 kHz
max. pulse energy		< 94 nJ
Measuring method		Pulse Ranging Technology (PRT)
Scan rate		10 Hz, 20 Hz, 30 Hz
Scanning angle		360°
Diameter of the light spot		25 mm x 105 mm at 10 m
Ambient light limit		50000 Lux
Functional safety related parameters		
$MTTF_d$		75 a
Mission Time (T_M)		20 a
Diagnostic Coverage (DC)		0 %
Indicators/operating means		
Operation indicator		LED green
Data flow indicator		LED yellow: active ethernet LED green: Ethernet link
Function indicator		LED red: fault LED yellow: Q1 + Q2
Control elements		2 Button
Parameterization indicator		24 x 252 pixels , red
Electrical specifications		
Operating voltage	U_B	10 ... 30 V DC
Ripple		10 % within the supply tolerance
No-load supply current	I_0	≤ 400 mA / 24 V DC
Power consumption	P_0	< 10 W
Time delay before availability	t_v	< 40 s
Integrated application		
Application		Field monitoring
Number of fields		4
Response time		30 ms + 1 Scan duration
Detectable object shape		Almost any
Object size		> 1 mm
Linking fields		Up to 4 x 3 levels
Interface		
Interface type		4 x switching inputs/outputs (selectable)
Input/Output		
Input/output type		4 Inputs/Outputs , Independently configurable , short circuit/reverse polarity protected
Input		
Switching threshold		low: Ue < 5 V, high: Ue > 10 V
Output		
Switching threshold		low: Ua < 1 V, high: Ua > Ub - 2 V
Switching current		100 mA per output

Release date: 2024-09-17 Date of issue: 2024-09-17 Filename: 70137274_eng.pdf

Technical Data

Conformity	
Laser safety	EN 60825-1:2014
Compliance with standards and directives	
Standard conformity	
Product standard	IEC 61000-6-2
Shock and impact resistance	EN 60068-2-6 EN 60068-2-27
Measurement accuracy	
Measuring speed	54000 measurements per second
Angle resolution	0,071°; 0,15°; 0,2°
Repeat accuracy	< 12 mm
Approvals and certificates	
Protection class	III (operating voltage 50 V)
UL approval	cULus Listed, Class 2 Power Source, Type 1 enclosure
CCC approval	CCC approval / marking not required for products rated ≤36 V
Ambient conditions	
Ambient temperature	-30 ... 50 °C (-22 ... 122 °F)
Storage temperature	-40 ... 70 °C (-40 ... 158 °F)
Relative humidity	95 % , no moisture condensation
Mechanical specifications	
Degree of protection	IP67
Connection	4-pin, M12x1 connector, standard (supply) , 8-pin, M12x1 connector, A-coded (MultiPort) , 4-pin, M12x1 socket, D-coded (LAN)
Material	
Housing	ABS + PC + Aluminum
Optical face	PMMA
Mass	approx. 0.8 kg
Dimensions	
Height	116.5 mm
Width	106 mm
Length	106 mm

Connection Assignment

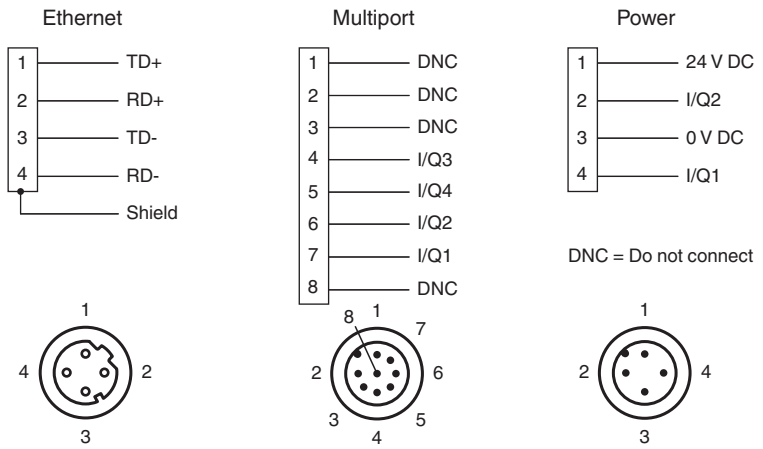

Release date: 2024-09-17 Date of issue: 2024-09-17 Filename: 70137274_eng.pdf

Assembly

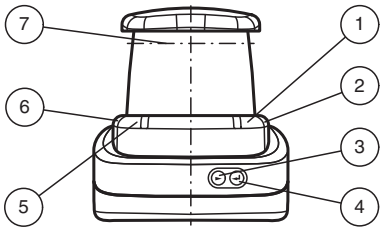

1	Operating status	green
2	Fault indication	red
3	Menu button	
4	Menu button	
5	Q2 signal indicator	yellow
6	Q1 signal indicator	yellow
7	Laser outlet	

Safety Information

Laser Class 1 Information
Maintenance and repairs should only be carried out by authorized service personnel!
Attach the device so that the warning is clearly visible and readable.
Caution – Use of controls or adjustments or performance of procedures other than those specified herein may result in hazardous radiation exposure.

Release date: 2024-09-17 Date of issue: 2024-09-17 Filename: 70137274_eng.pdf

2-D LiDAR Sensor

OMD10M-R2300-B23-V1V1D-1S

- High angle resolution
- Can be aligned using an integrated pilot laser
- Measuring method PRT (Pulse Ranging Technology)
- Compact design
- High pollution tolerance

R2300, 2-D LiDAR sensor for object detection and positioning, measuring range to object up to 10 m, Ethernet

Function

The 2-D LiDAR sensor uses Pulse Ranging Technology (PRT). So the sensor reaches a large detection range for small light spot widths.
The device has a measuring angle of 100°. With 1 scanning layer the device produces 2-D-data.
The optional switchable pilot laser is projected accurately on the scanning layers. Thus an optimal orientation of the sensor is possible.
Output of the measuring values as well as the parameterization takes place via standard Ethernet-interface.

Dimensions

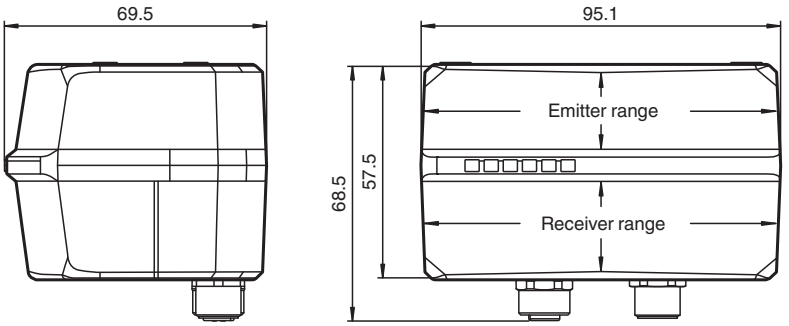

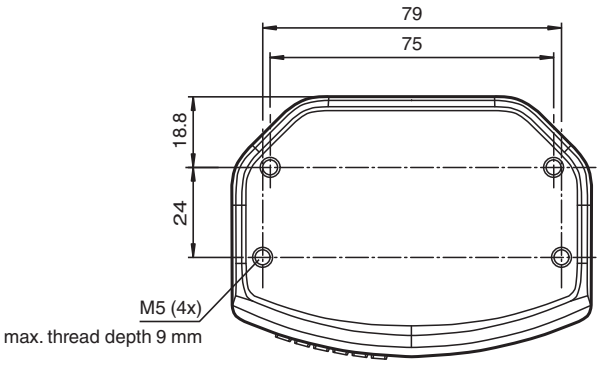

Technical Data

General specifications	
Measurement range	0.2 ... 4 m (bk 10%) 0.2 ... 10 m (wh 90%)
Reference target	Kodak white (90%)
Light source	laser diode

Release date: 2023-04-13 Date of issue: 2023-04-13 Filename: 70148748_eng.pdf

Technical Data

Laser nominal ratings		
Note		LASER RADIATION , DO NOT STARE INTO BEAM
Laser class		1
Wave length		Measuring laser infrared light 905 nm Pilot laser red light 650 nm
Beam divergence		Measuring laser: transversal 2 mrad , longitudinal 9.5 mrad Pilot laser: 0.3 mrad
Pulse length		Measuring laser: 5.2 ns Pilot laser: 1.1 µs
Repetition rate		90 kHz
max. pulse energy		Measuring laser: < 81 nJ Pilot laser: < 60 nJ
Measuring method		Pulse Ranging Technology (PRT)
Scan rate		100 s^{-1} 50 s-1
Scanning zone		100° horizontal
Diameter of the light spot		25 mm x 100 mm at 10 m
Filter		Maximum, average, median
Ambient light limit		60000 Lux
Resolution		1 mm
Functional safety related parameters		
$MTTF_d$		75 a
Mission Time (T_M)		20 a
Diagnostic Coverage (DC)		0 %
Indicators/operating means		
Operation indicator		LED green
Data flow indicator		LED yellow: active ethernet LED green: Ethernet link
Function indicator		LED red: fault
Control elements		none
Parameterization indicator		none
Electrical specifications		
Operating voltage	U_B	10 ... 30 V
Ripple		10 % within the supply tolerance
No-load supply current	I_0	≤ 300 mA / 24 V DC
Power consumption	P_0	< 8 W
Time delay before availability	t_v	< 20 s
Interface		
Interface type		Fast Ethernet
Protocol		HTTP , UDP/IP
Input/Output		
Input/output type		none
Conformity		
Product standard		EN 60947-5-2
Laser safety		EN 60825-1:2014
Measurement accuracy		
Measuring speed		50000 measurements per second
Measured value noise		typ. 30 mm , 1 sigma
Angle resolution		0.1 ° at 50 Hz
Absolute accuracy		typ. ± 30 mm
Repeat accuracy		< 12 mm
Approvals and certificates		
Protection class		III (operating voltage 50 V)
CCC approval		CCC approval / marking not required for products rated ≤36 V

Release date: 2023-04-13 Date of issue: 2023-04-13 Filename: 70148748_eng.pdf

Technical Data

Ambient conditions	
Ambient temperature	-30 ... 50 °C (-22 ... 122 °F)
Storage temperature	-30 ... 70 °C (-22 ... 158 °F)
Relative humidity	95 % , no moisture condensation
Mechanical specifications	
Housing width	96 mm
Housing height	57 mm
Degree of protection	IP65
Connection	4-pin, M12x1 connector, standard (supply) , shield connected on both sides 4-pin, M12x1 socket, D-coded (LAN)
Material	
Housing	ABS + PC
Optical face	PC (Polycarbonate)
Mass	approx. 0.27 kg
Tightening torque, fastening screws	1.5 Nm
Number of mounting holes	4 , max. thread depth 9 mm

Connection Assignment

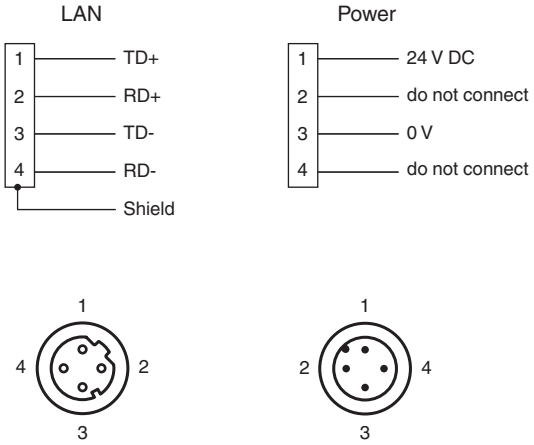

Assembly

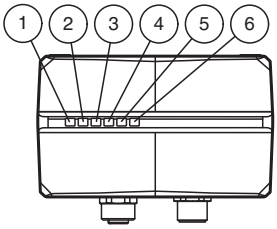

1	Power ON	green
2	Error indication	red
3	Not used	
4	Not used	
5	Ethernet ACT	yellow
6	Ethernet Link	green

Release date: 2023-04-13 Date of issue: 2023-04-13 Filename: 70148748_eng.pdf

Technical Features

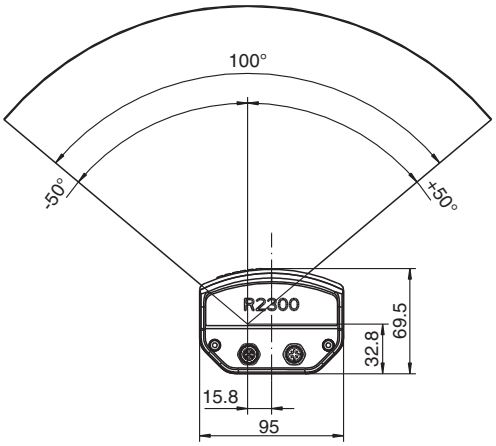

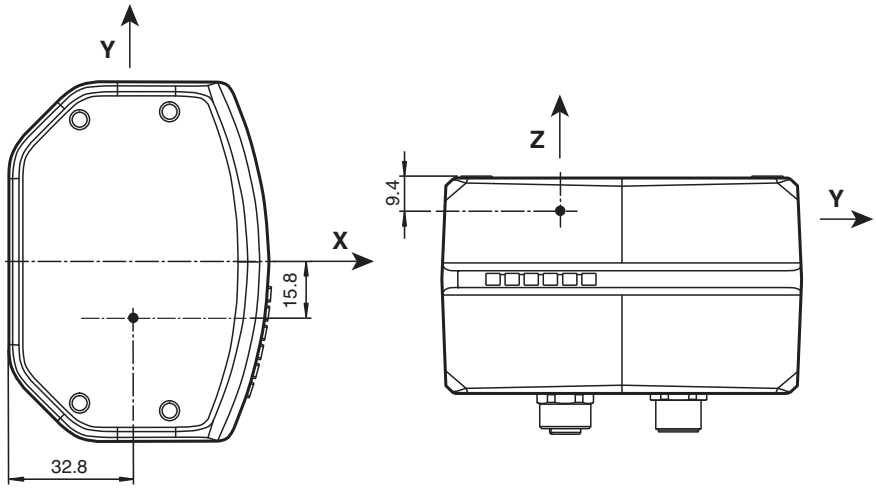

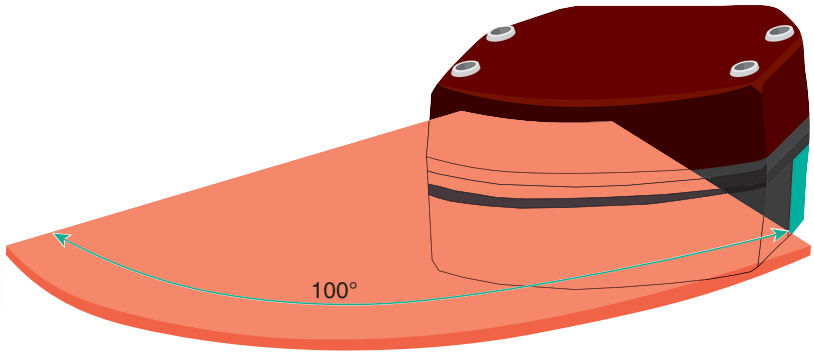

Release date: 2023-04-13 Date of issue: 2023-04-13 Filename: 70148748_eng.pdf

Technical Features

Typical Echoamplitude

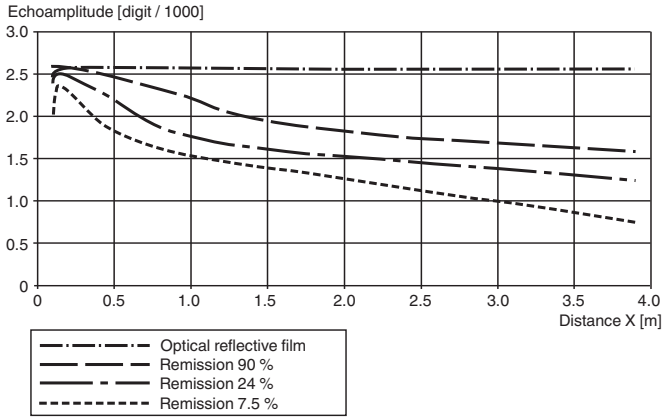

	LASER 1
IEC 60825-1:2014	

Safety Information

Laser Class 1 Information
The irradiation can lead to irritation especially in a dark environment. Do not point at people!
Maintenance and repairs should only be carried out by authorized service personnel!
Attach the device so that the warning is clearly visible and readable.
Caution – Use of controls or adjustments or performance of procedures other than those specified herein may result in hazardous radiation exposure.

Cybersecurity

From the security point-of-view, the responsible plant operator requires to take the following measures:

- Provide physical protection of the device from unauthorized third-party access
- Ensure a point-to-point connection between the device and the higher-level controller
- Ensure that the device is only operated in an isolated network without any direct connection to a company network, the internet, or cloud services;
  - in this context, the device may only communicate with a higher-level controller or with a defined, trustworthy group of network participants

Accessories

	Schutzkappe LS610 Zubehoer	M12 protective cap set (connector + socket) for series LS610 / LS611
	V1SD-G-2M-PUR-ABG-V45-G	Connection cable, M12 to RJ-45, PUR cable 4-pin, CAT5e

Release date: 2023-04-13 Date of issue: 2023-04-13 Filename: 70148748_eng.pdf

Accessories

	V1SD-G-ABG-PG9	Male connector M12 straight D-coded 4-pin, for cable diameter 5 - 8 mm, shielded, field-attachable
	V1SD-90-W-3M-PUR-ABG-V45-G	Ethernet bus cable M12 plug angled D-coded to RJ45 Ethernet-coded, 4-pin, PUR cable blue, Cat5e, shielded
	V1-G-5M-PUR	Female cordset single-ended M12 straight A-coded, 4-pin, PUR cable grey
	V1-G-BK5M-PUR-U	Female cordset single-ended M12 straight A-coded, 4-pin, PUR cable black, UL approved, drag chain suitable, torsion resistant
	V1-W-5M-PUR-ABG	Female cordset single-ended M12 angled A-coded, 4-pin, PUR cable grey, shielded

Release date: 2023-04-13 Date of issue: 2023-04-13 Filename: 70148748_eng.pdf

3-D LiDAR sensor

OMD10M-R2300-B23-V1V1D-4S

- High angle resolution
- Can be aligned using an integrated pilot laser
- Measuring method PRT (Pulse Ranging Technology)
- Compact design
- High pollution tolerance

R2300, 3-D LiDAR sensor for object detection and positioning, measuring range to object up to 10 m, Ethernet

Function

The 3-D LiDAR sensor uses Pulse Ranging Technology (PRT). So the sensor reaches a large detection range for small light spot widths.
The device has a measuring angle of 100°. With 4 scanning layers the device produces 3-D-data.
The optional switchable pilot laser is projected accurately on the scanning layers. Thus an optimal orientation of the sensor is possible.
Output of the measuring values as well as the parameterization takes place via standard Ethernet-interface.

Dimensions

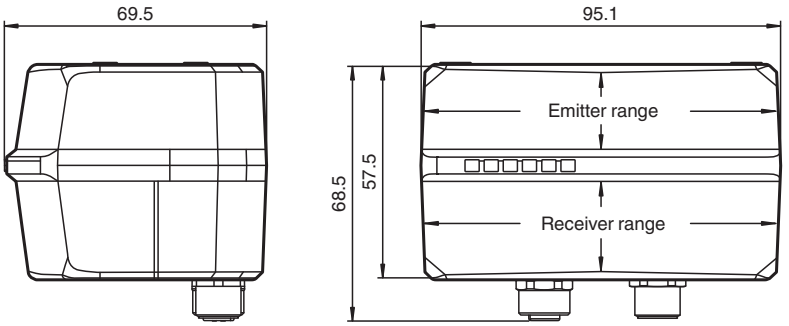

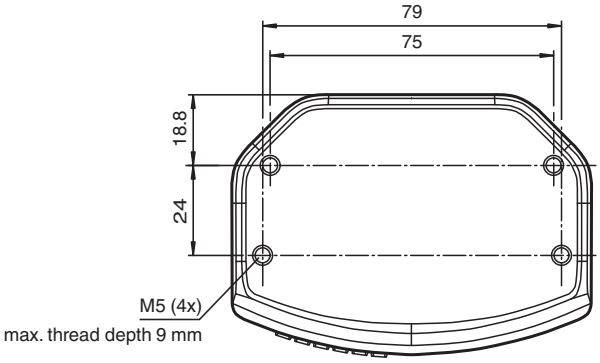

Technical Data

General specifications	
Measurement range	0.2 ... 4 m (bk 10%) 0.2 ... 10 m (wh 90%)
Reference target	Kodak white (90%)
Light source	laser diode

Release date: 2023-04-13 Date of issue: 2023-04-13 Filename: 70159636_eng.pdf

Technical Data

Laser nominal ratings		
Note		LASER RADIATION , DO NOT STARE INTO BEAM
Laser class		1
Wave length		Measuring laser infrared light 905 nm Pilot laser red light 650 nm
Beam divergence		Measuring laser: transversal 2 mrad , longitudinal 9.5 mrad Pilot laser: 0.3 mrad
Pulse length		Measuring laser: 5.2 ns Pilot laser: 1.1 µs
Repetition rate		90 kHz
max. pulse energy		Measuring laser: < 81 nJ Pilot laser: < 60 nJ
Measuring method		Pulse Ranging Technology (PRT)
Frame rate		25 fps 12.5 fps
Scan rate		100 s^{-1} 50 s-1
Scanning zone		100° horizontal, 9° vertical
Diameter of the light spot		25 mm x 100 mm at 10 m
Filter		Maximum, average, median
Ambient light limit		60000 Lux
Resolution		1 mm
Functional safety related parameters		
$MTTF_d$		75 a
Mission Time (T_M)		20 a
Diagnostic Coverage (DC)		0 %
Indicators/operating means		
Operation indicator		LED green
Data flow indicator		LED yellow: active ethernet LED green: Ethernet link
Function indicator		LED red: fault
Control elements		none
Parameterization indicator		none
Electrical specifications		
Operating voltage	U_B	10 ... 30 V
Ripple		10 % within the supply tolerance
No-load supply current	I_0	≤ 300 mA / 24 V DC
Power consumption	P_0	< 8 W
Time delay before availability	t_v	< 20 s
Interface		
Interface type		Fast Ethernet
Protocol		HTTP , UDP/IP
Input/Output		
Input/output type		none
Conformity		
Product standard		EN 60947-5-2
Laser safety		EN 60825-1:2014
Measurement accuracy		
Measuring speed		50000 measurements per second
Measured value noise		typ. 30 mm , 1 sigma
Angle resolution		0.1° at 12.5 Hz
Absolute accuracy		typ. ± 30 mm
Repeat accuracy		< 12 mm
Approvals and certificates		

Release date: 2023-04-13 Date of issue: 2023-04-13 Filename: 70159636_eng.pdf

Technical Data

Protection class	III (operating voltage 50 V)
CCC approval	CCC approval / marking not required for products rated ≤36 V
Ambient conditions	
Ambient temperature	-30 ... 50 °C (-22 ... 122 °F)
Storage temperature	-30 ... 70 °C (-22 ... 158 °F)
Relative humidity	95 % , no moisture condensation
Mechanical specifications	
Housing width	96 mm
Housing height	57 mm
Degree of protection	IP65
Connection	4-pin, M12x1 connector, standard (supply) , shield connected on both sides 4-pin, M12x1 socket, D-coded (LAN)
Material	
Housing	ABS + PC
Optical face	PC (Polycarbonate)
Mass	approx. 0.27 kg
Tightening torque, fastening screws	1.5 Nm
Number of mounting holes	4 , max. thread depth 9 mm

Connection Assignment

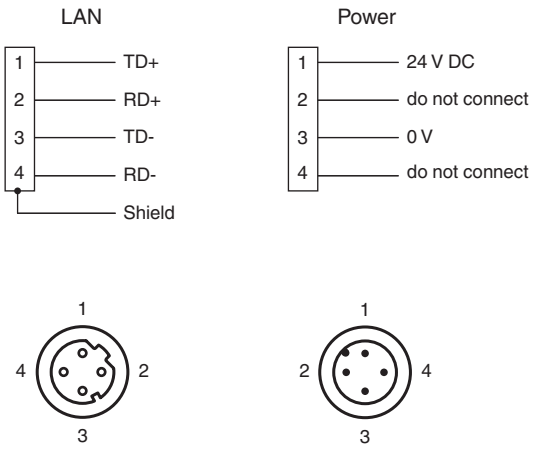

Assembly

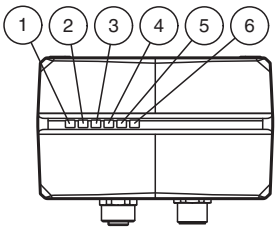

1	Power ON	green
2	Error indication	red
3	Not used	
4	Not used	
5	Ethernet ACT	yellow
6	Ethernet Link	green

Release date: 2023-04-13 Date of issue: 2023-04-13 Filename: 70159636_eng.pdf

Technical Features

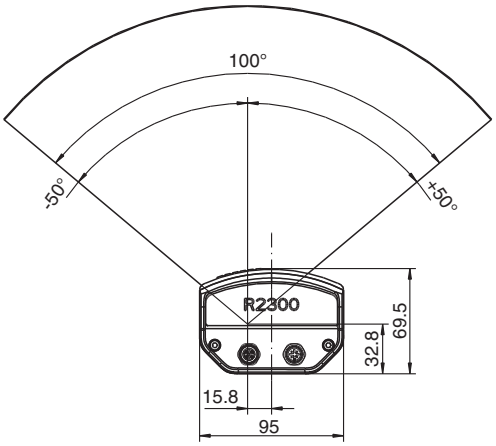

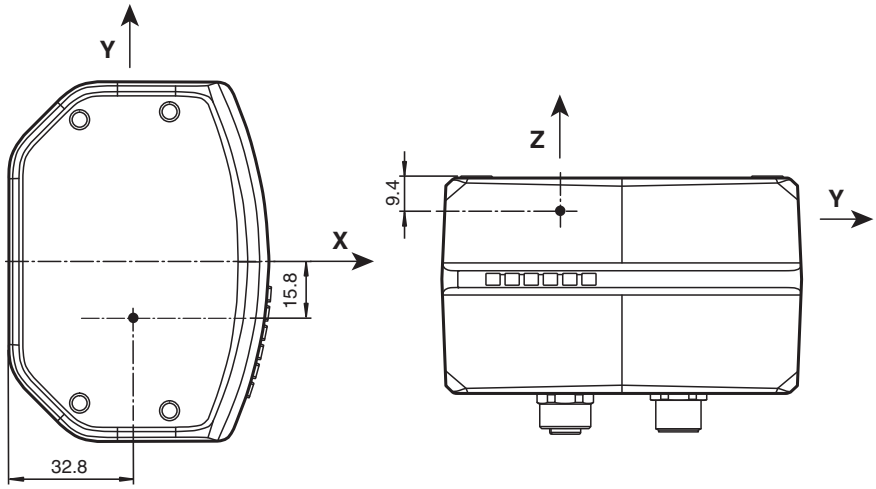

Release date: 2023-04-13 Date of issue: 2023-04-13 Filename: 70159636_eng.pdf

Technical Features

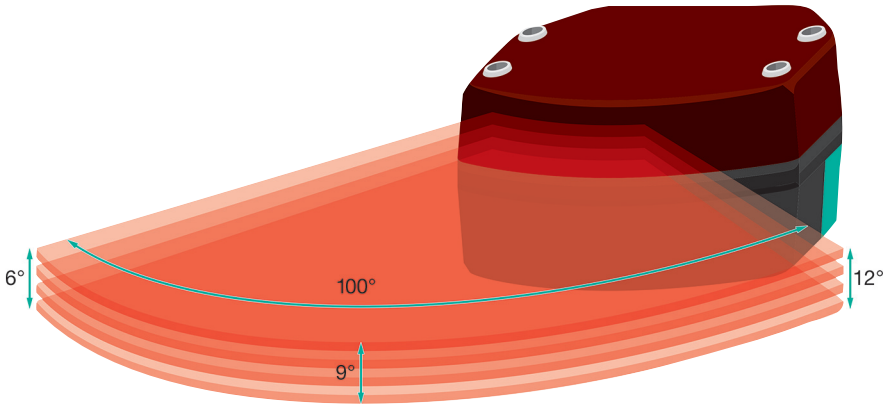

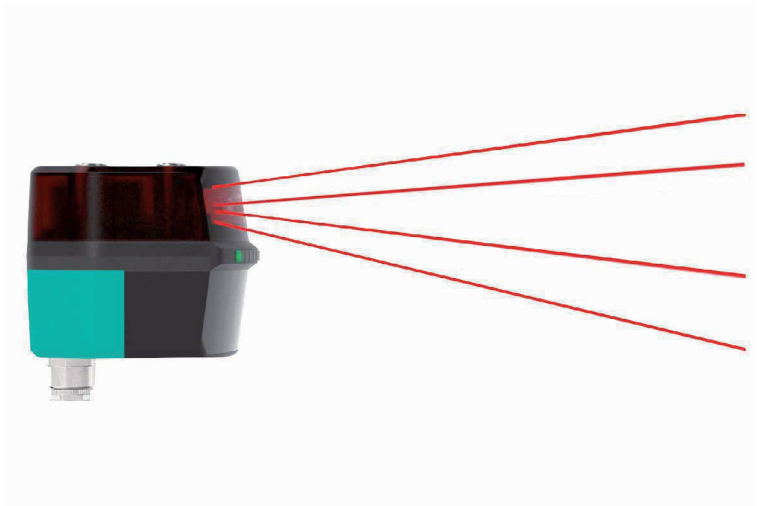

Release date: 2023-04-13 Date of issue: 2023-04-13 Filename: 70159636_eng.pdf

Technical Features

Typical Echoamplitude

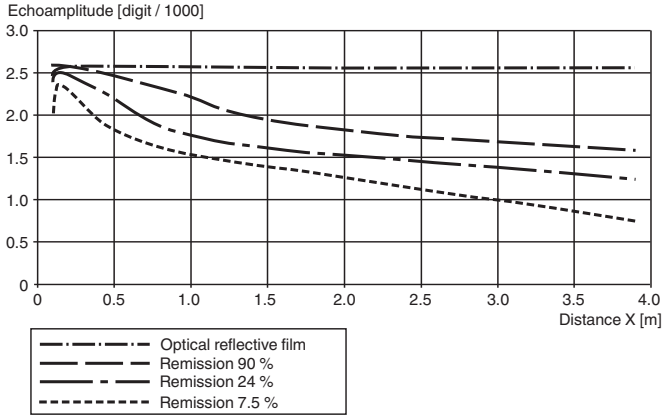

	LASER 1
IEC 60825-1:2014	

Safety Information

Laser Class 1 Information
The irradiation can lead to irritation especially in a dark environment. Do not point at people!
Maintenance and repairs should only be carried out by authorized service personnel!
Attach the device so that the warning is clearly visible and readable.
Caution – Use of controls or adjustments or performance of procedures other than those specified herein may result in hazardous radiation exposure.

Cybersecurity

From the security point-of-view, the responsible plant operator requires to take the following measures:

- Provide physical protection of the device from unauthorized third-party access
- Ensure a point-to-point connection between the device and the higher-level controller
- Ensure that the device is only operated in an isolated network without any direct connection to a company network, the internet, or cloud services;
  - in this context, the device may only communicate with a higher-level controller or with a defined, trustworthy group of network participants

Accessories

	Schutzkappe LS610 Zubehoer	M12 protective cap set (connector + socket) for series LS610 / LS611
	V1SD-G-2M-PUR-ABG-V45-G	Connection cable, M12 to RJ-45, PUR cable 4-pin, CAT5e
	V1SD-G-ABG-PG9	Male connector M12 straight D-coded 4-pin, for cable diameter 5 - 8 mm, shielded, field-attachable
	V1SD-90-W-3M-PUR-ABG-V45-G	Ethernet bus cable M12 plug angled D-coded to RJ45 Ethernet-coded, 4-pin, PUR cable blue, Cat5e, shielded
	V1-G-5M-PUR	Female cordset single-ended M12 straight A-coded, 4-pin, PUR cable grey
	V1-G-BK5M-PUR-U	Female cordset single-ended M12 straight A-coded, 4-pin, PUR cable black, UL approved, drag chain suitable, torsion resistant
	V1-W-5M-PUR-ABG	Female cordset single-ended M12 angled A-coded, 4-pin, PUR cable grey, shielded

Release date: 2023-04-13 Date of issue: 2023-04-13 Filename: 70159636_eng.pdf

По вопросам продаж и поддержки обращайтесь:

Алматы (727)345-47-04
Ангарск (3955)60-70-56
Архангельск (8182)63-90-72
Астрахань (8512)99-46-04
Барнаул (3852)73-04-60
Белгород (4722)40-23-64
Благовещенск (4162)22-76-07
Брянск (4832)59-03-52
Владивосток (423)249-28-31
Владикавказ (8672)28-90-48
Владимир (4922)49-43-18
Волгоград (844)278-03-48
Вологда (8172)26-41-59
Воронеж (473)204-51-73
Екатеринбург (343)384-55-89
Иваново (4932)77-34-06
Ижевск (3412)26-03-58
Иркутск (395)279-98-46
Казань (843)206-01-48
Калининград (4012)72-03-81
Калуга (4842)92-23-67
Кемерово (3842)65-04-62
Киров (8332)68-02-04
Коломна (4966)23-41-49
Кострома (4942)77-07-48
Краснодар (861)203-40-90
Красноярск (391)204-63-61
Курск (4712)77-13-04
Курган (3522)50-90-47
Липецк (4742)52-20-81
Магнитогорск (3519)55-03-13
Москва (495)268-04-70
Мурманск (8152)59-64-93
Набережные Челны (8552)20-53-41
Нижний Новгород (831)429-08-12
Новокузнецк (3843)20-46-81
Ноябрьск (3496)41-32-12
Новосибирск (383)227-86-73
Омск (3812)21-46-40
Орел (4862)44-53-42
Оренбург (3532)37-68-04
Пенза (8412)22-31-16
Петрозаводск (8142)55-98-37
Псков (8112)59-10-37
Пермь (342)205-81-47
Ростов-на-Дону (863)308-18-15
Рязань (4912)46-61-64
Самара (846)206-03-16
Санкт-Петербург (812)309-46-40
Саратов (845)249-38-78
Севастополь (8692)22-31-93
Саранск (8342)22-96-24
Симферополь (3652)67-13-56
Смоленск (4812)29-41-54
Сочи (862)225-72-31
Ставрополь (8652)20-65-13
Сургут (3462)77-98-35
Сыктывкар (8212)25-95-17
Тамбов (4752)50-40-97
Тверь (4822)63-31-35
Тольятти (8482)63-91-07
Томск (3822)98-41-53
Тула (4872)33-79-87
Тюмень (3452)66-21-18
Ульяновск (8422)24-23-59
Улан-Удэ (3012)59-97-51
Уфа (347)229-48-12
Хабаровск (4212)92-98-04
Чебоксары (8352)28-53-07
Челябинск (351)202-03-61
Череповец (8202)49-02-64
Чита (3022)38-34-83
Якутск (4112)23-90-97
Ярославль (4852)69-52-93

Россия +7(495)268-04-70
Казахстан +7(727) 345-47-04
Беларусь +(375) 257-127-884
Узбекистан +998(71)205-18-59
Киргизия +996(312)96-26-47

эл.почта: phb@nt-rt.ru || сайт: https://pepperl-fuchs.nt-rt.ru/